SECTION MT
MANUAL TRANSAXLE

CONTENTS

PRECAUTIONS **3**
Service Notice or Precautions 3
PREPARATION **4**
Special Service Tools 4
Commercial Service Tools 6
NOISE, VIBRATION AND HARSHNESS (NVH) TROUBLESHOOTING **8**
NVH Troubleshooting Chart 8
DESCRIPTION **9**
Cross-Sectional View 9
DOUBLE-CONE SYNCHRONIZER 10
TRIPLE-CONE SYNCHRONIZER 10
REVERSE GEAR NOISE PREVENTION FUNCTION (SYNCHRONIZING METHOD) 10
M/T OIL **11**
Changing M/T Oil 11
DRAINING 11
FILLING 11
Checking M/T Oil 11
OIL LEAKAGE AND OIL LEVEL 11
SIDE OIL SEAL **12**
Removal and Installation 12
REMOVAL 12
INSTALLATION 12
POSITION SWITCH **13**
Checking 13
BACK-UP LAMP SWITCH 13
PARK/NEUTRAL POSITION (PNP) SWITCH 13
CONTROL LINKAGE **14**
Components of Control Device and Cable 14
Removal and Installation 15
AIR BREATHER HOSE **16**
Removal and Installation 16
TRANSAXLE ASSEMBLY **17**
Removal and Installation 17
COMPONENTS 17
REMOVAL 17
INSTALLATION 18
Disassembly and Assembly 19
COMPONENTS 19
DISASSEMBLY 23
ASSEMBLY 27
ADJUSTMENT 33
INPUT SHAFT AND GEARS **37**
Disassembly and Assembly 37
DISASSEMBLY 37
INSPECTION AFTER DISASSEMBLY 38
ASSEMBLY 41
MAINSHAFT AND GEARS **45**
Disassembly and Assembly 45
DISASSEMBLY 45
INSPECTION AFTER DISASSEMBLY 46
ASSEMBLY 48
REVERSE IDLER SHAFT AND GEARS **53**
Disassembly and Assembly 53
DISASSEMBLY 53
INSPECTION AFTER DISASSEMBLY 53
ASSEMBLY 54
FINAL DRIVE **55**
Disassembly and Assembly 55
PRE-INSPECTION 55
DISASSEMBLY 55
INSPECTION AFTER DISASSEMBLY 56
ASSEMBLY 56
SHIFT CONTROL **59**
Inspection 59
SHIFT FORK 59
SERVICE DATA AND SPECIFICATIONS (SDS) **60**
General Specifications 60
TRANSAXLE 60
FINAL GEAR 60
Gear End Play 61
Baulk Ring Clearance 61
Available Snap Rings 61
INPUT SHAFT BEARING SPACER 61
5TH MAIN GEAR 62
Available C-Rings 62

MAINSHAFT C-RING 62
Available Thrust Washer 62
INPUT SHAFT THRUST WASHER 62
DIFFERENTIAL SIDE GEAR THRUST WASHER ... 62
Available Adjusting Shims 63
4TH MAIN GEAR ADJUSTING SHIM 63
INPUT SHAFT REAR BEARING ADJUSTING SHIM 63
MAINSHAFT REAR BEARING ADJUSTING SHIM 63
REVERSE IDLER GEAR ADJUSTING SHIM 64
Available Shims 64
BEARING PRELOAD 64
DIFFERENTIAL SIDE BEARING ADJUSTING SHIM(S) 64

PRECAUTIONS

PFP:00001

Service Notice or Precautions

ACS007XX

- Do not reuse transaxle oil, once it has been drained.
- Check oil level or replace oil with vehicle on level surface.
- During removal or installation, keep inside of transaxle clear of dust or dirt.
- Check for the correct installation status prior to removal or disassembly. If matching marks are required, be certain they do not interfere with the function of the parts they are applied.
- In principle, tighten bolts or nuts gradually in several steps working diagonally from inside to outside. If tightening sequence is specified, use it.
- Be careful not to damage sliding surfaces and mating surfaces.

PREPARATION

PFP:00002

Special Service Tools

ACS007XY

The actual shapes of Kent-Moore tools may differ from those of special service tools illustrated here.

Tool number (Kent-Moore No.) Tool name	Description
KV381054S0 (J-34286) Puller 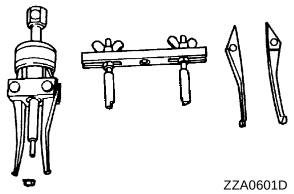 ZZA0601D	● Removing differential side bearing outer race ● Removing mainshaft front bearing
ST35321000 (—) Drift a: 49 mm (1.93 in) dia. b: 41 mm (1.61 in) dia. 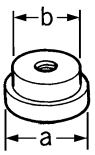 ZZA1000D	● Installing input shaft oil seal ● Installing reverse main gear ● Installing 1st main gear bushing ● Installing 1st-2nd synchronizer hub assembly ● Installing 2nd main gear bushing ● Installing 3rd main gear ● Removing differential side bearing (clutch housing side)
ST30720000 (J-25405) Drift a: 77 mm (3.03 in) dia. b: 55.5 mm (2.185 in) dia. 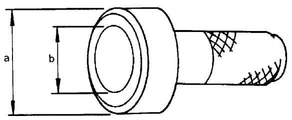 ZZA0811D	● Installing differential side oil seal ● Installing differential side bearing outer race ● Installing mainshaft rear bearing ● Installing differential side bearing
ST33200000 (J-26082) Drift a: 60 mm (2.36 in) dia. b: 44.5 mm (1.752 in) dia. 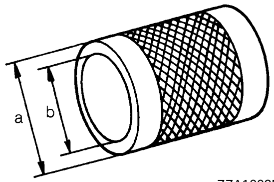 ZZA1002D	● Installing mainshaft front bearing ● Installing 4th main gear ● Installing 5th main gear
KV40105320 (—) Drift a: 88 mm (3.46 in) dia. 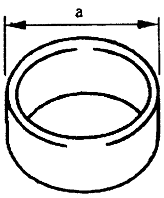 ZZA0898D	Installing differential side bearing outer race
ST33061000 (J-8107-2) Drift a: 38 mm (1.50 in) dia. b: 28.5 mm (1.122 in) dia. 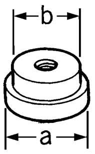 ZZA1000D	● Installing bore plug ● Removing differential side bearing (transaxle case side)

Tool number (Kent-Moore No.) Tool name	Description
ST33052000 (—) Drift a: 22 mm (0.87 in) dia. b: 28 mm (1.10 in) dia. 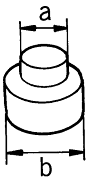 ZZA1023D	● Installing welch plug ● Removing input shaft rear bearing ● Removing input shaft bearing spacer and 5th stopper ● Removing 5th input gear bushing, thrust washer, 4th input gear, 4th input gear bushing, 3rd-4th synchronizer hub assembly and 3rd input gear ● Installing input shaft front bearing ● Removing mainshaft rear bearing ● Removing 4th main gear and 5th main gear
KV40105020 (—) Drift a: 39.7 mm (1.563 in) dia. b: 35 mm (1.38 in) dia. c: 15 mm (0.59 in) 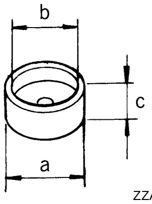 ZZA1133D	● Removing 5th input gear and 5th synchronizer hub assembly ● Removing 3rd main gear, 2nd main gear, 2nd main gear bushing, 1st-2nd synchronizer hub assembly, 1st main gear, reverse main gear and 1st main gear bushing
KV40105710 (—) Press stand a: 46 mm (1.81 in) dia. b: 41 mm (1.61 in) 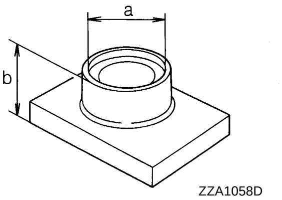 ZZA1058D	● Installing 3rd-4th synchronizer hub assembly ● Installing 4th input gear bushing ● Installing 5th input gear bushing ● Installing 5th synchronizer hub assembly ● Installing 2nd main gear bushing ● Installing 3rd main gear
ST30032000 (J-26010-01) Drift a: 80 mm (3.15 in) dia. b: 38 mm (1.50 in) dia. c: 31 mm (1.22 in) dia. 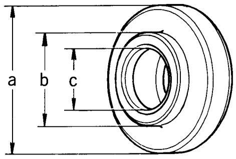 ZZA0978D	● Installing 5th stopper and input shaft bearing spacer ● Installing input shaft front bearing
ST38220000 (—) Press stand a: 63 mm (2.48 in) dia. b: 65 mm (2.56 in) 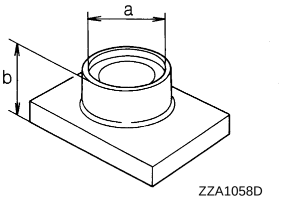 ZZA1058D	● Installing reverse main gear ● Installing 1st main gear bushing ● Installing 1st-2nd synchronizer hub assembly
ST30901000 (J-26010-01) Drift a: 79 mm (3.11 in) dia. b: 45 mm (1.77 in) dia. c: 35.2 mm (1.386 in) dia. 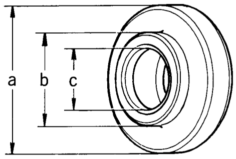 ZZA0978D	● Installing input shaft rear bearing ● Installing 4th main gear ● Installing 5th main gear ● Installing mainshaft rear bearing

Tool number (Kent-Moore No.) Tool name		Description
ST30031000 (J-22912-01) Puller	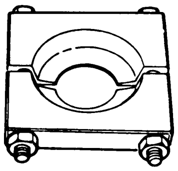 ZZA0537D	Measuring wear of inner baulk ring
KV40101630 (J-35870) Drift a: 68 mm (2.68 in) dia. b: 60 mm (2.36 in) dia.	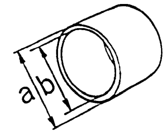 ZZA1003D	Installing reverse main gear
KV38102510 (—) Drift a: 71 mm (2.80 in) dia. b: 65 mm (2.56 in) dia.	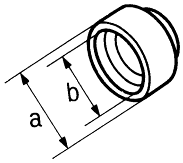 ZZA0838D	● Installing 1st main gear bushing ● Installing 1st-2nd synchronizer hub assembly ● Installing differential side bearing (transaxle case side)
KV40104830 (—) Drift a: 70 mm (2.76 in) dia. b: 63.5 mm (2.500 in) dia.	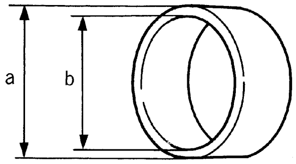 ZZA0936D	Installing differential side bearing (clutch housing side)
(J-39713) Preload adapter	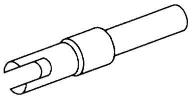 NT087	Measuring end play of side gear

Commercial Service Tools

ACS007XZ

Tool name		Description
Puller	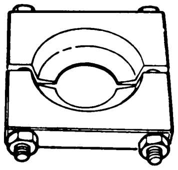 ZZA0537D	Removing each bearing, gear and bushing
Puller	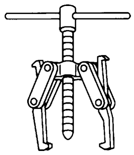 NT077	Removing each bearing, gear and bushing

Tool name	Description
Pin punch Tip diameter: 4.5 mm (0.177 in) dia. ZZA0815D	Removing and installing each retaining pin
Power tool 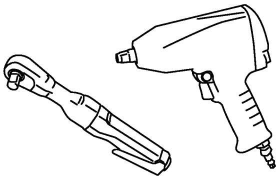 PBIC0190E	Loosening bolts and nuts

NOISE, VIBRATION AND HARSHNESS (NVH) TROUBLESHOOTING

PFP:00003

NVH Troubleshooting Chart

ACS007Y0

Use the chart below to help you find the cause of the symptom. The numbers indicate the order of the inspection. If necessary, repair or replace these parts.

Reference page		MA-19			MT-19	MT-19	MT-22	MT-14	MT-22	MT-22	MT-20	MT-20	MT-20	MT-20
SUSPECTED PARTS (Possible cause)		OIL (Oil level is low.)	OIL (Wrong oil.)	OIL (Oil level is high.)	GASKET (Damaged)	OIL SEAL (Worn or damaged)	O-RING (Worn or damaged)	SHIFT CONTROL LINKAGE (Worn)	CHECK PLUG RETURN SPRING AND CHECK BALL (Worn or damaged)	SHIFT FORK (Worn)	GEAR (Worn or damaged)	BEARING (Worn or damaged)	BAULK RING (Worn or damaged)	INSERT SPRING (Damaged)
Symptoms	Noise	1	2								3	3		
	Oil leakage		3	1	2	2	2							
	Hard to shift or will not shift		1	1				2					3	3
	Jumps out of gear							1	2	3	3			

DESCRIPTION

PFP:00000

Cross-Sectional View

ACS007Y1

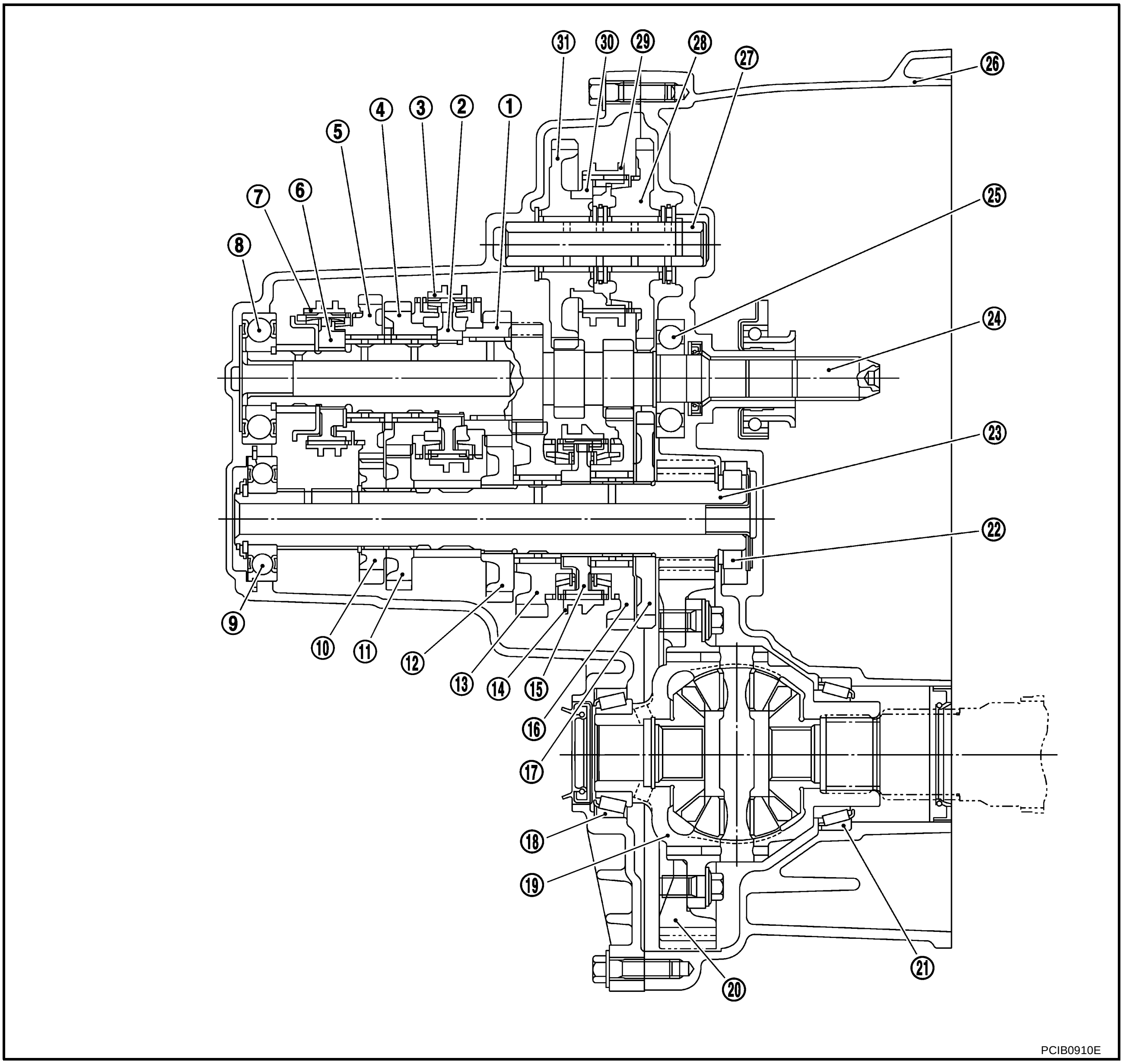

1. 3rd input gear	2. 3rd-4th synchronizer hub	3. 3rd-4th coupling sleeve
4. 4th input gear	5. 5th input gear	6. 5th synchronizer hub
7. 5th coupling sleeve	8. Input shaft rear bearing	9. Mainshaft rear bearing
10. 5th main gear	11. 4th main gear	12. 3rd main gear
13. 2nd main gear	14. 1st-2nd coupling sleeve	15. 1st-2nd synchronizer hub
16. 1st main gear	17. Reverse main gear	18. Differential side bearing
19. Differential case	20. Final gear	21. Differential side bearing
22. Mainshaft front bearing	23. Mainshaft	24. Input shaft
25. Input shaft front bearing	26. Clutch housing	27. Reverse idler shaft
28. Reverse idler gear (Front)	29. Reverse coupling sleeve	30. Reverse synchronizer hub
31. Reverse idler gear (Rear)		

DOUBLE-CONE SYNCHRONIZER

Double-cone synchronizer is adopted for 3rd gear to reduce operating force of the shift lever.

TRIPLE-CONE SYNCHRONIZER

Triple-cone synchronizer is adopted for 1st and 2nd gears to reduce operating force of the shift lever.

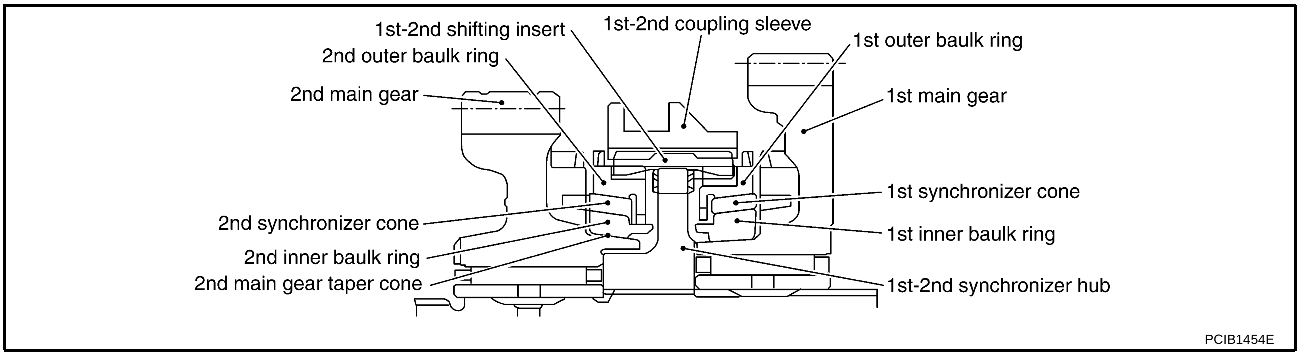

REVERSE GEAR NOISE PREVENTION FUNCTION (SYNCHRONIZING METHOD)

Reverse gear can be matched smoothly in a structure by setting synchronizer hub, coupling sleeve, baulk ring and insert spring to reverse gear, and letting reverse gear be synchronized.

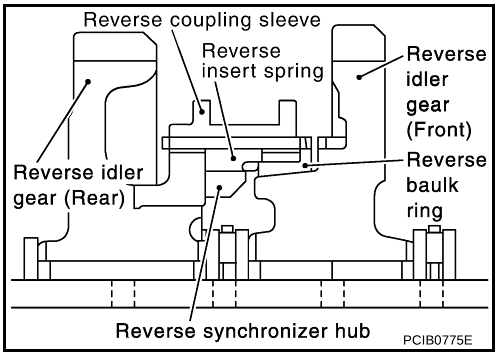

M/T OIL

PFP:KLD20

Changing M/T Oil

ACS007Y2

DRAINING

1. Start engine and let it run to warm up transaxle.
2. Stop engine. Remove drain plug and drain oil.
3. Set a gasket on drain plug and install it to transaxle, and tighten to the specified torque. Refer to MT-19, "Case and Housing Components" .

   CAUTION:
   Do not reuse gasket.

FILLING

1. Remove filler plug. Fill with new oil to transaxle.

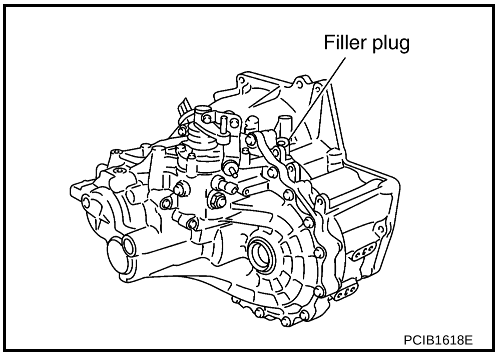

Oil grade and viscosity:	**Refer to MA-10, "Fluids and Lubricants" .**
Oil capacity (reference):	**Approx. 2.2 ℓ (2-3/8 US qt, 2 Imp qt)**

2. After refilling oil, check oil level.
3. Set a gasket on filler plug and then install it to clutch housing. Tighten filler plug to the specified torque. Refer to MT-19, "Case and Housing Components" .

   CAUTION:
   Do not reuse gasket.

Checking M/T Oil

ACS007Y3

OIL LEAKAGE AND OIL LEVEL

- Make sure that oil is not leaking from transaxle or around it.
- Remove filler plug.
- Measure oil level using a suitable gauge as shown in the figure, and then check if it is within the specifications.

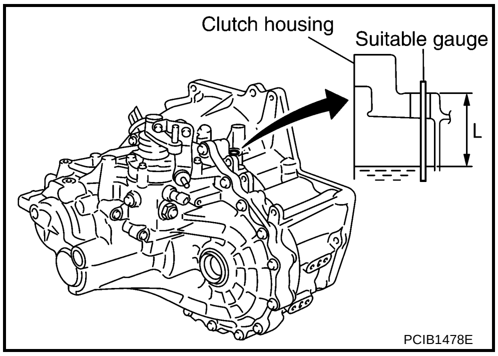

Oil level “L”:	**168.0 - 174.0 mm (6.61 - 6.85 in)**

CAUTION:
Do not start engine while checking oil level.

- Set a gasket on filler plug and then install it to transaxle. Tighten filler plug to the specified torque. Refer to MT-19, "Case and Housing Components" .

  CAUTION:
  Do not reuse gasket.

SIDE OIL SEAL

PFP:32113

Removal and Installation

ACS007Y4

REMOVAL

- **Clutch housing side oil seal used on AWD vehicles is attached to transfer. Be sure to replace it when transfer is removed.**

1. Remove drive shaft from transaxle. Refer to FAX-13, "FRONT DRIVE SHAFT" .
2. Remove oil seal with a flat-bladed screwdriver.

   CAUTION:

   Be careful not to damage the case surface when removing oil seal.

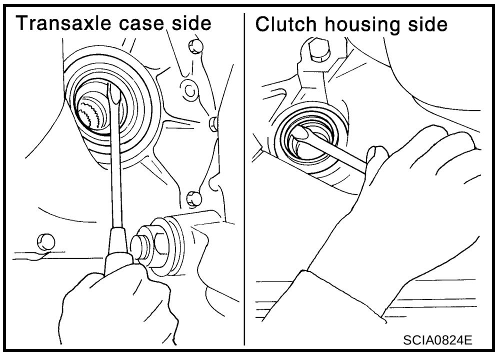

INSTALLATION

1. Using the drift, drive the oil seal straight until it protrudes from the case end equal to the dimension A shown in the figure.

   Dimension “A”:

   Within 0.5 mm (0.020 in) of flush with the case.

   Drift to be used

Transaxle case side	**: ST30720000 (J-25405)**
Clutch housing side	**: ST30720000 (J-25405)**

   CAUTION:

   - **Apply multi-purpose grease onto oil seal lip. (For clutch housing side)**
   - **Do not reuse oil seal.**

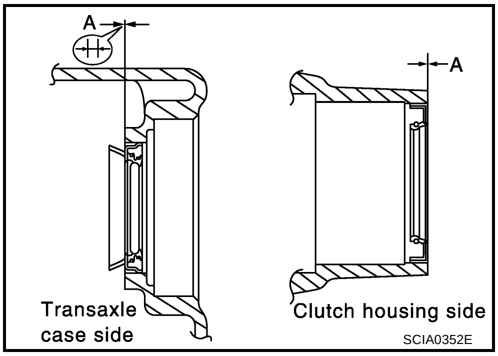

2. Install all parts in the reverse order of removal and check oil level after installation. Refer to MT-11, "Checking M/T Oil" .

POSITION SWITCH

PFP:32005

Checking

ACS007Y5

BACK-UP LAMP SWITCH

- Check continuity.

Gear position	Continuity
Reverse	Yes
Except reverse	No

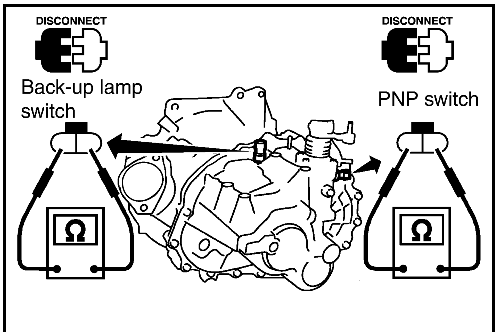

SCIA5644E

PARK/NEUTRAL POSITION (PNP) SWITCH

- Check continuity.

Gear position	Continuity
Neutral	Yes
Except neutral	No

CONTROL LINKAGE

PFP:34103

Components of Control Device and Cable

ACS007Y6

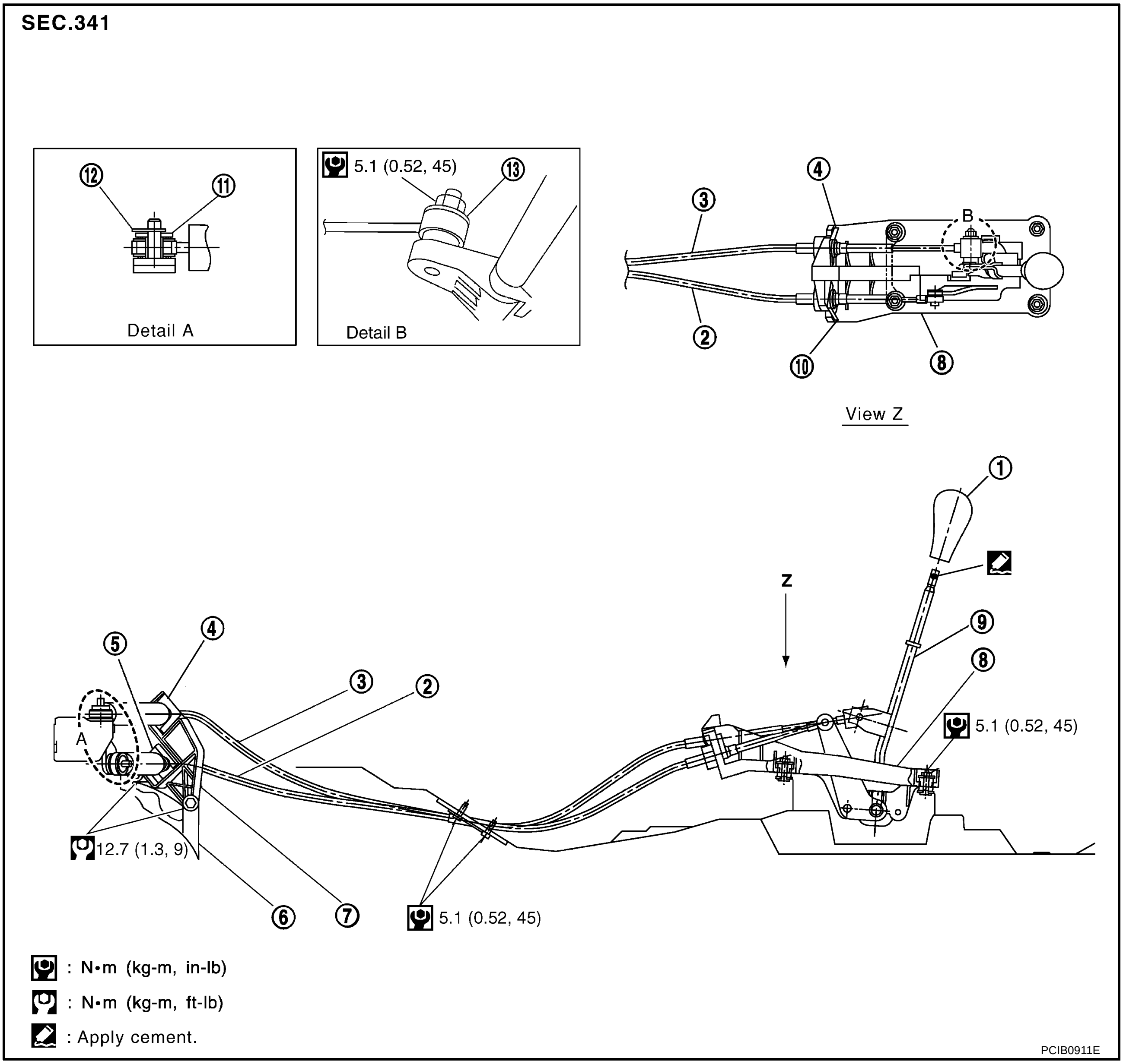

1. Control lever knob
2. Select cable
3. Shift cable
4. Lock plate (shift side)
5. Lock plate (select side)
6. Clutch housing
7. Cable mounting bracket
8. Control device assembly
9. Control lever
10. Lock plate
11. Washer
12. Snap pin
13. Washer

Removal and Installation

ACS007Y7

Note the following, when removal and installation.

- Shift the control lever to the neutral position for removal.
- Keep in mind that the select side lock plate for securing control cable is different from the shift side lock plate.
- After assembly, make sure selector lever automatically returns to Neutral when it is moved to 1st-2nd or Reverse.

AIR BREATHER HOSE

PFP:31098

Removal and Installation

ACS007Y8

Refer to the figure for air breather hose removal and installation information.

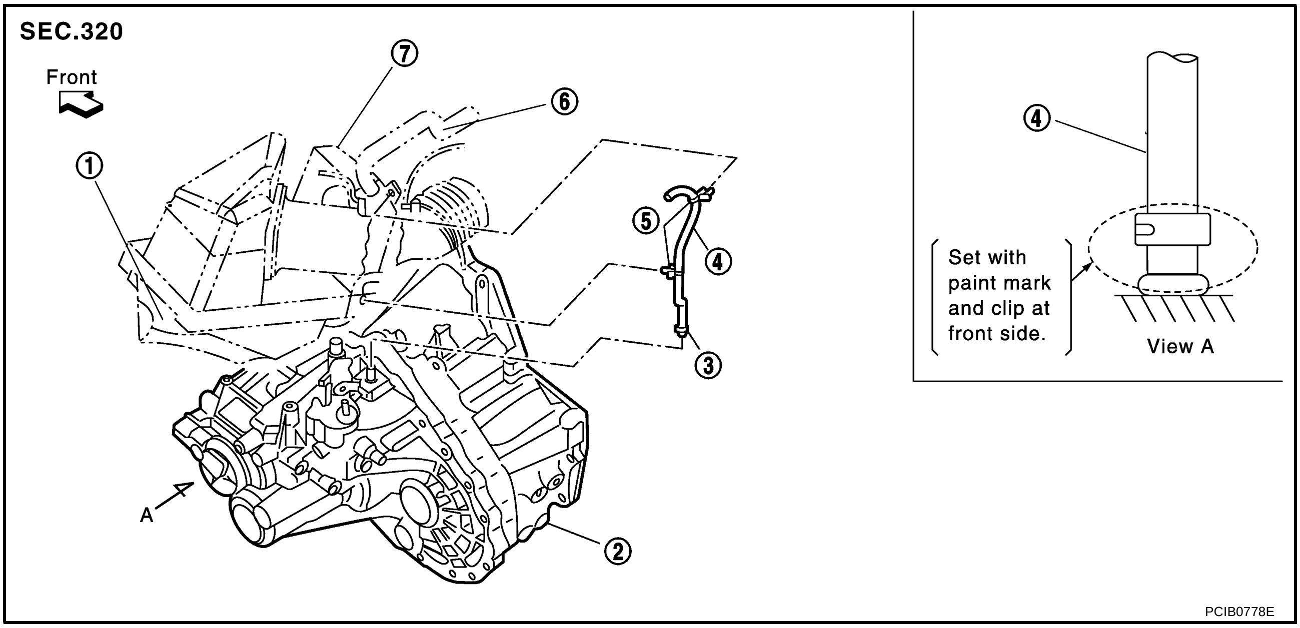

1.	Air cleaner case	2.	Transaxle	3.	Clip
4.	Air breather hose	5.	Clip	6.	PCV hose
7.	Resonator				

CAUTION:

- **Make sure there are no pinched or restricted areas on air breather hose caused by bending or winding when installing it.**
- **Be sure to insert air breather hose into air breather tube until overlap area reaches the spool.**

TRANSAXLE ASSEMBLY

PFP:32010

Removal and Installation

ACS007Y9

COMPONENTS

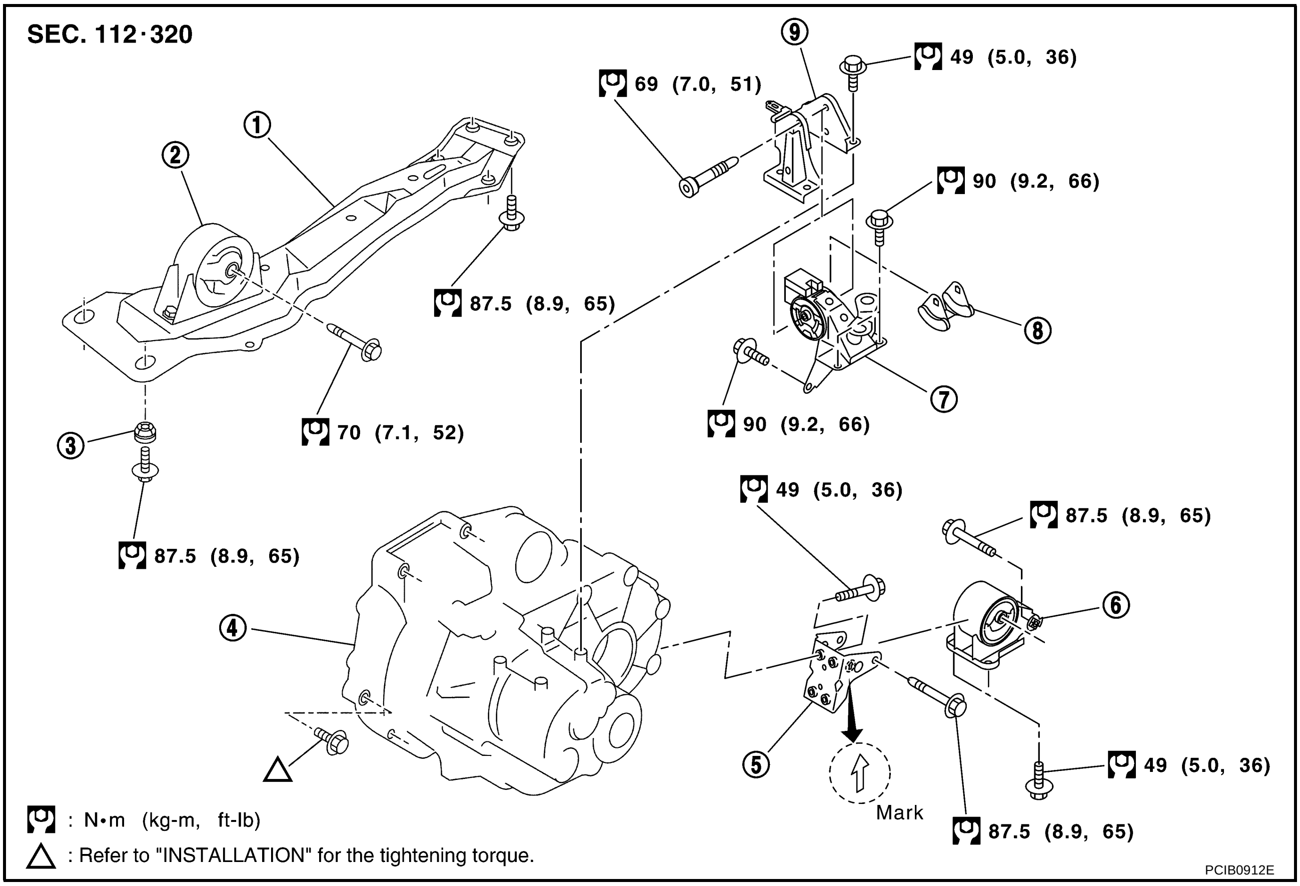

1.	Center member	2.	Front engine mounting insulator	3.	Grommet
4.	Transaxle assembly	5.	Rear engine mounting bracket	6.	Rear engine mounting insulator
7.	LH engine mounting insulator	8.	Stopper	9.	LH engine mounting bracket

REMOVAL

1. Remove air cleaner, air duct and battery. Refer to EM-14, "Removal and Installation" .
2. Remove air breather hose. Refer to MT-16, "Removal and Installation" .
3. Remove clutch operating cylinder. Refer to CL-10, "Removal and Installation" .

   CAUTION:
   Do not depress clutch pedal during removal procedure.
4. Disconnect control cable from transaxle assembly. Refer to MT-15, "Removal and Installation" .
5. Drain gear oil. Refer to MT-11, "Changing M/T Oil" .
6. Disconnect park/neutral position switch, back-up lamp switch and ground harness connectors.
7. Remove exhaust front tube. Refer to EX-3, "Removal and Installation" .
8. Remove drive shaft. Refer to FAX-13, "FRONT DRIVE SHAFT" .
9. Remove transfer with power tool. Refer to TF-48, "Removal and Installation" .
10. Remove starter motor with power tool. Refer to SC-16, "Removal and Installation" .
11. Support transaxle assembly with a jack.

    CAUTION:
    When setting a jack, be careful not to bring it into contact with switches.
12. Remove center member, engine insulator and engine mount bracket with power tool. Refer to EM-78, "Removal and Installation (AWD Models)" .
13. Remove suspension members with power tool. Refer to FSU-17, "Removal and Installation" .
14. Support engine with a jack under oil pan.

15. Remove bolts fixing transaxle assembly to engine with power tool.
16. Remove transaxle assembly from vehicle.

    CAUTION:

    Secure transaxle assembly to a jack while removing it.

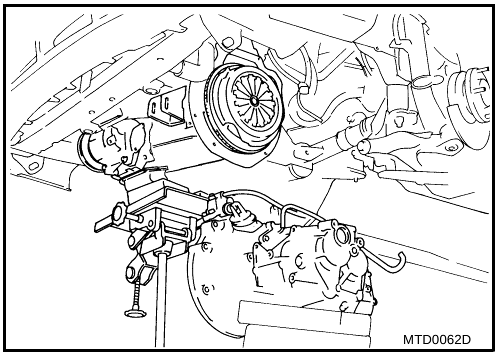

INSTALLATION

Note the following, and install in the reverse order of removal.

- When installing the transaxle assembly to the engine, install the mounting bolts following the standard below.

  CAUTION:

  When installing transaxle assembly, be careful not to bring transaxle input shaft into contact with clutch cover.

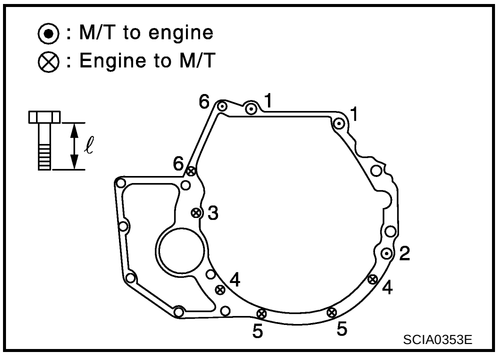

Bolt No.	1	2	3	4	5	6
Quantity	2	1	1	2	2	2
Bolt length "ℓ" mm (in)	40 (1.57)	75 (2.95)	45 (1.77)	40 (1.57)	30 (1.18)	40 (1.57)
Tightening torque N·m (kg-m, ft-lb)	74.5 (7.6, 55)			42.7 (4.4, 31)		35.3 (3.6, 26)

- After installation, check oil level and check for leaks and loose mechanisms. Refer to MT-11, "Checking M/T Oil" .

Disassembly and Assembly

ACS008HV

COMPONENTS

Case and Housing Components

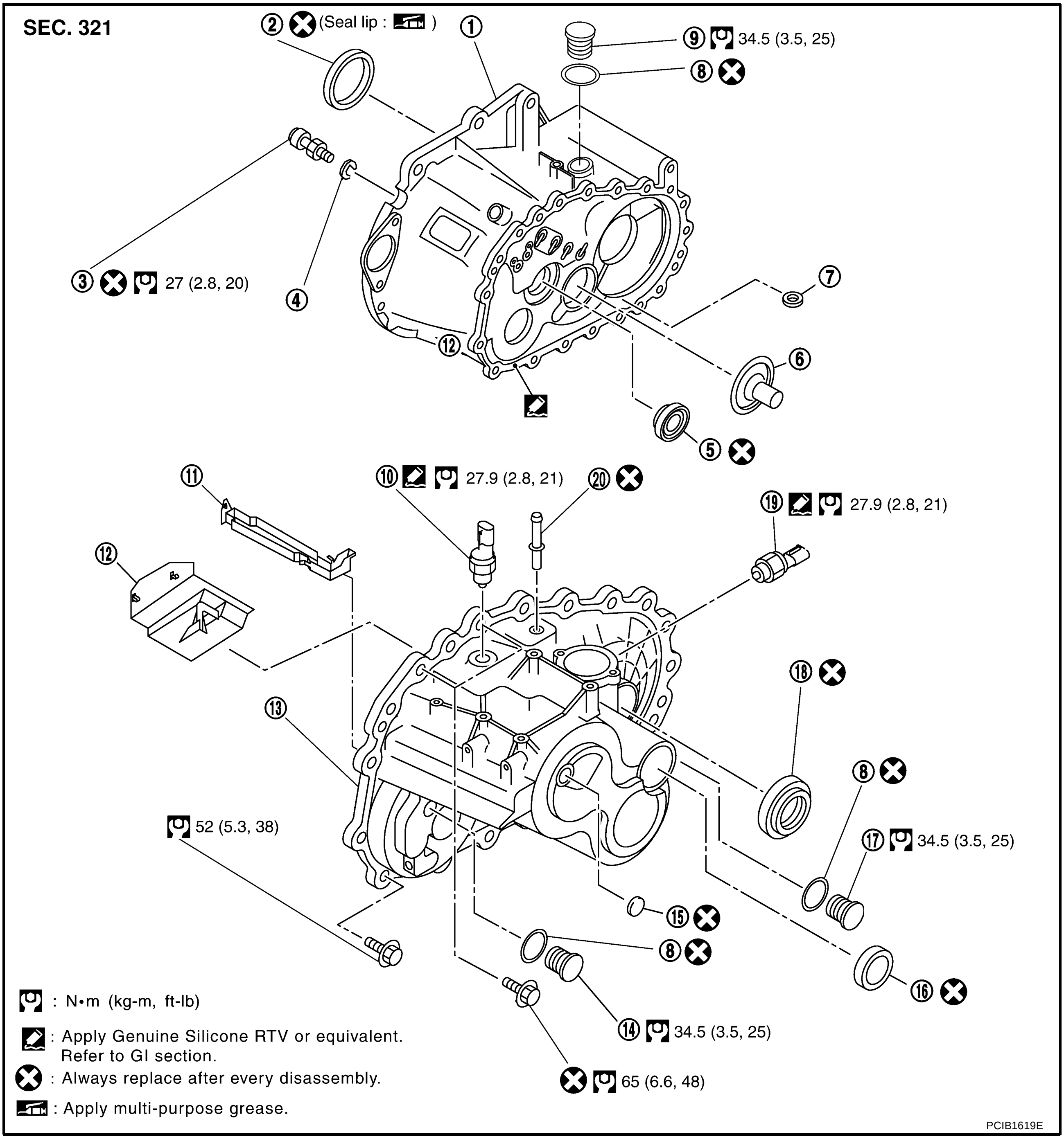

1. Clutch housing
2. Differential side oil seal
3. Ball pin
4. Washer
5. Input shaft oil seal
6. Oil channel
7. Magnet
8. Gasket
9. Filler plug
10. Back-up lamp switch
11. Oil gutter
12. Baffle plate
13. Transaxle case
14. Plug
15. Welch plug
16. Bore plug
17. Drain plug
18. Differential side oil seal
19. Park/Neutral position (PNP) switch
20. Air breather tube

Gear Components

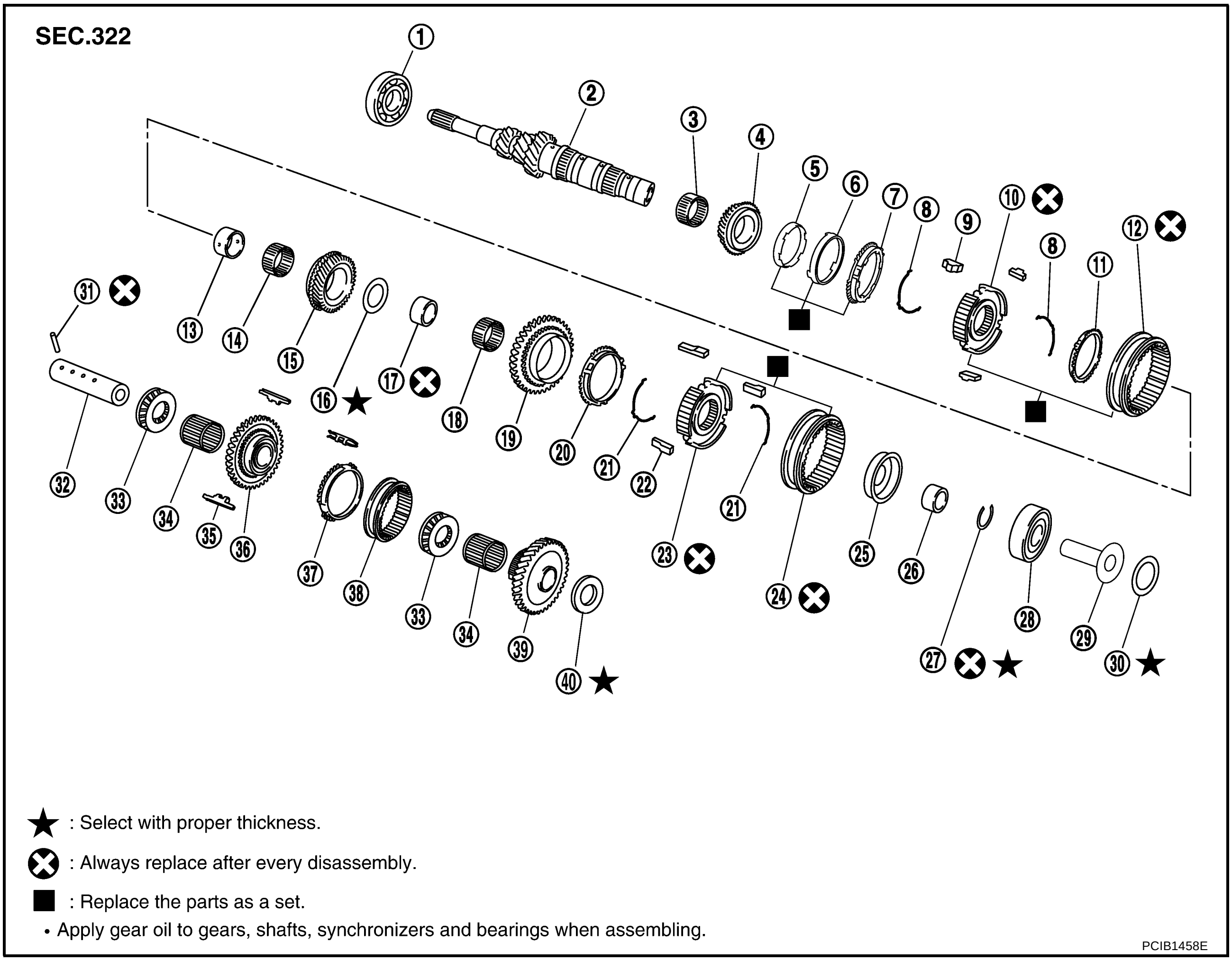

1. Input shaft front bearing	2. Input shaft	3. 3rd needle bearing
4. 3rd input gear	5. 3rd inner baulk ring	6. 3rd synchronizer cone
7. 3rd outer baulk ring	8. 3rd-4th spread spring	9. 3rd-4th shifting insert
10. 3rd-4th synchronizer hub	11. 4th baulk ring	12. 3rd-4th coupling sleeve
13. 4th input gear bushing	14. 4th needle bearing	15. 4th input gear
16. Thrust washer	17. 5th input gear bushing	18. 5th needle bearing
19. 5th input gear	20. 5th baulk ring	21. 5th spread spring
22. 5th shifting insert	23. 5th synchronizer hub	24. 5th coupling sleeve
25. 5th stopper	26. Input shaft bearing spacer	27. Snap ring
28. Input shaft rear bearing	29. Oil channel	30. Input shaft rear bearing adjusting shim
31. Retaining pin	32. Reverse idler shaft	33. Thrust needle bearing
34. Reverse idler gear needle bearing	35. Reverse insert spring	36. Reverse idler gear (Front)
37. Reverse baulk ring	38. Reverse coupling sleeve	39. Reverse idler gear (Rear)
40 Reverse idler gear adjusting shim		

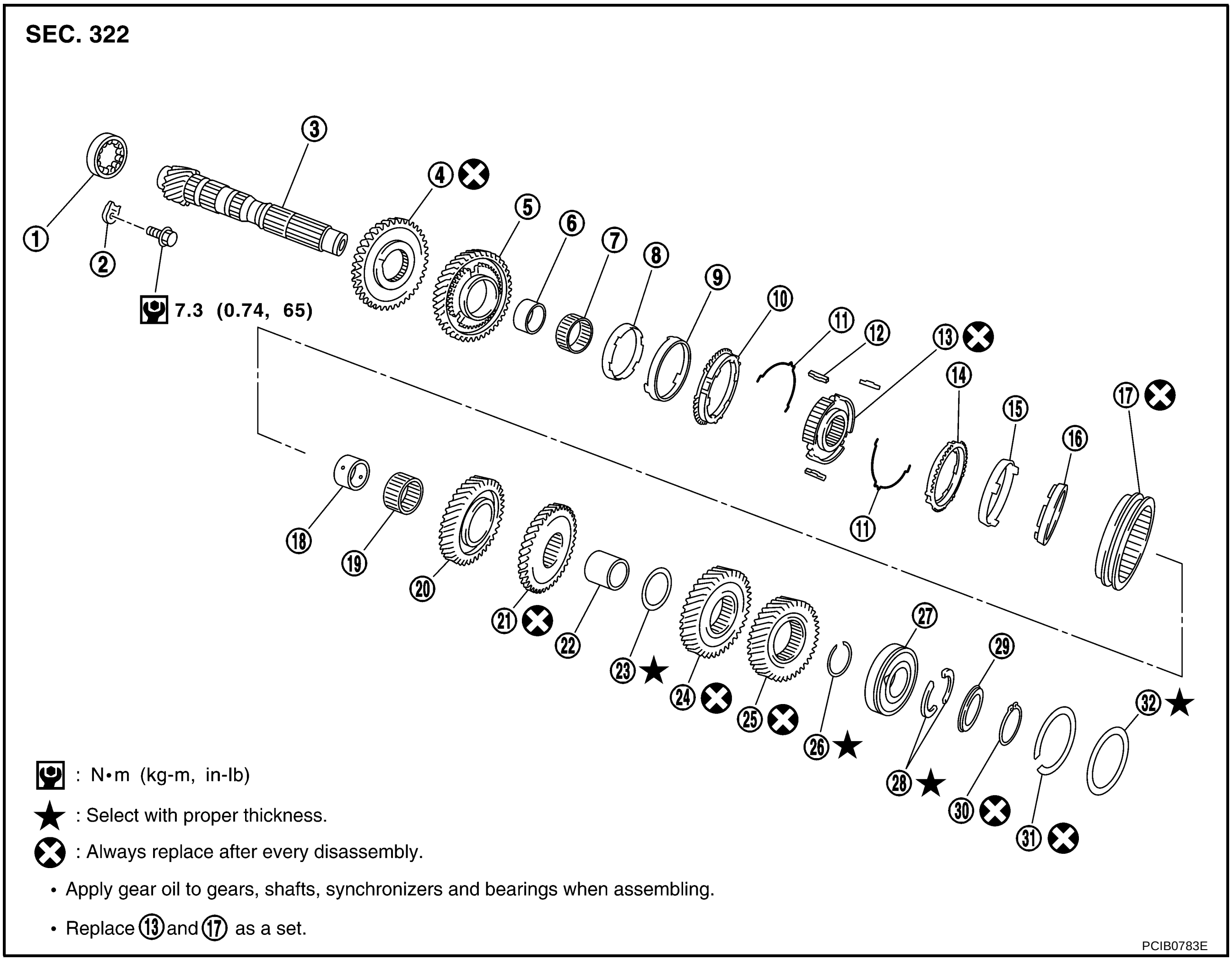

1.	Mainshaft front bearing	2.	Mainshaft bearing retainer	3.	Mainshaft
4.	Reverse main gear	5.	1st main gear	6.	1st main gear bushing
7.	1st needle bearing	8.	1st inner baulk ring	9.	1st synchronizer cone
10.	1st outer baulk ring	11.	1st-2nd spread spring	12.	1st-2nd shifting insert
13.	1st-2nd synchronizer hub	14.	2nd outer baulk ring	15.	2nd synchronizer cone
16.	2nd inner baulk ring	17.	1st-2nd coupling sleeve	18.	2nd main gear bushing
19.	2nd needle bearing	20.	2nd main gear	21.	3rd main gear
22.	3rd-4th mainshaft spacer	23.	4th main gear adjusting shim	24.	4th main gear
25.	5th main gear	26.	Snap ring	27.	Mainshaft rear bearing
28.	Mainshaft C-ring	29.	C-ring holder	30.	Snap ring
31.	Snap ring	32.	Mainshaft rear bearing adjusting shim		

Shift Control Components

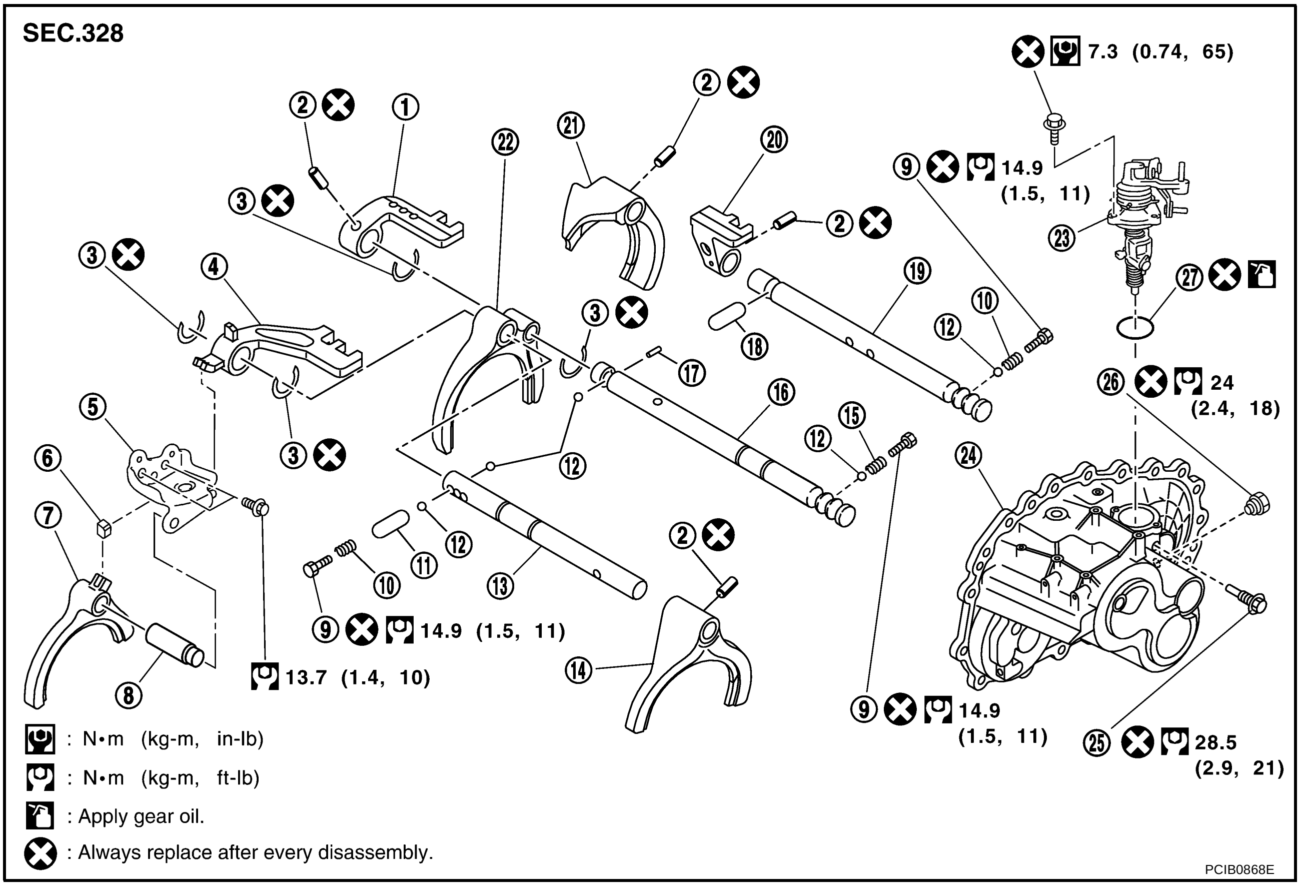

1. 3rd-4th bracket
2. Retaining pin
3. Stopper ring
4. 5th-reverse bracket
5. Reverse lever assembly
6. Shifter cap
7. Reverse shift fork
8. Reverse fork rod
9. Check plug
10. Check spring
11. Shift check sleeve
12. Check ball
13. 5th-reverse fork rod
14. 5th shift fork
15. Check spring
16. 3rd-4th fork rod
17. Interlock pin
18. Shift check sleeve
19. 1st-2nd fork rod
20. 1st-2nd bracket
21. 1st-2nd shift fork
22. 3rd-4th shift fork
23. Control assembly
24. Transaxle case
25. Stopper bolt
26. Shift check
27. O-ring

Final Drive Components

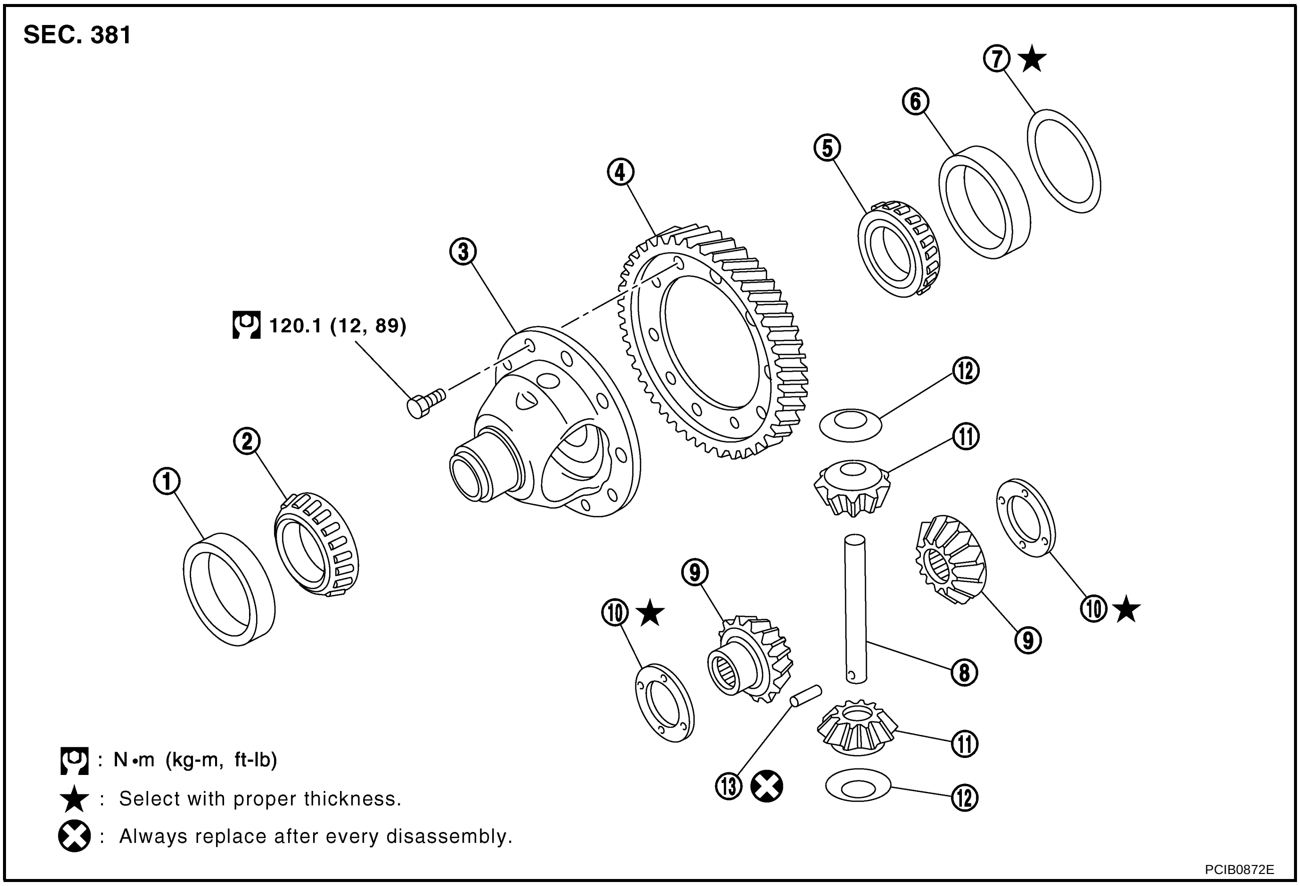

1.	Differential side bearing outer race (clutch housing side)	2.	Differential side bearing (clutch housing side)	3.	Differential case
4.	Final gear	5.	Differential side bearing (transaxle case side)	6.	Differential side bearing outer race (transaxle case side)
7.	Differential side bearing adjusting shim	8.	Pinion mate shaft	9.	Side gear
10.	Side gear thrust washer	11.	Pinion mate gear	12.	Pinion mate thrust washer
13.	Retaining pin				

DISASSEMBLY

1. Remove filler plug from clutch housing.
2. Remove drain plug and plug from transaxle case.
3. Remove park/neutral position (PNP) switch and back-up lamp switch from transaxle case.
4. Remove shift check and stopper bolt from transaxle case, and then remove control assembly from transaxle case.

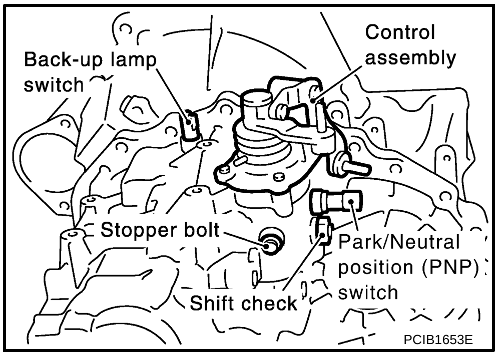

5. Remove check plugs (3 pieces), check springs (3 pieces), check balls (3 pieces) and shift check sleeve (1 piece).

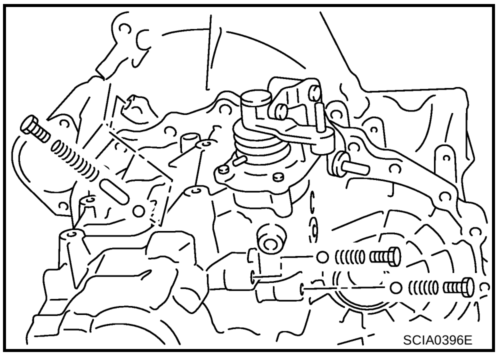

6. Remove transaxle case mounting bolts.
7. Remove bore plug from transaxle case.

   CAUTION:

   Be careful not to damage transaxle case.
8. While spreading the snap ring of mainshaft rear bearing located at bore plug hole, remove transaxle case from clutch housing.
9. Remove oil gutter, baffle plate from transaxle case.
10. Remove snap ring, mainshaft rear bearing adjusting shim from transaxle case.
11. Remove input shaft rear bearing adjusting shim and reverse idler gear adjusting shim.

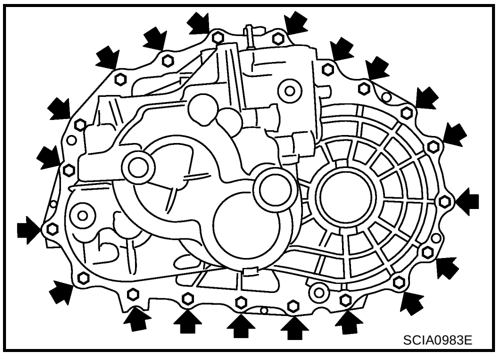

12. Remove differential side bearing outer race from transaxle case using the puller, and then remove differential side bearing adjusting shim from transaxle case.

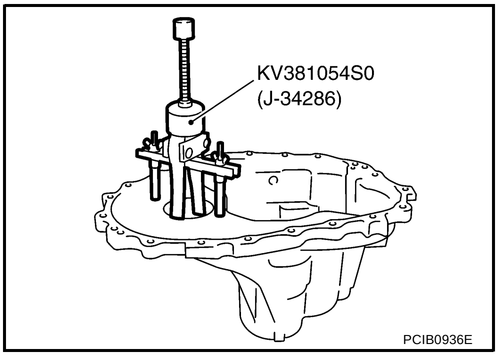

13. Remove welch plug from transaxle case.

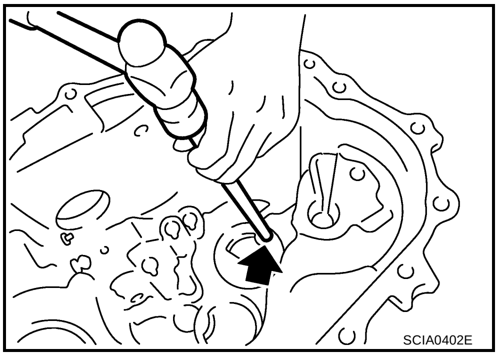

14. Remove differential side oil seal from transaxle case.
    CAUTION:
    Be careful not to damage transaxle case.
15. Remove magnet from clutch housing.

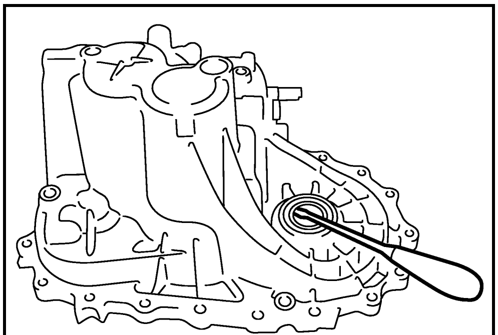
SCIA0397E

16. With shift lever in 5th position, remove mounting bolts from reverse lever assembly. Lift reverse lever assembly to remove.
    CAUTION:
    Be careful not to lose shifter cap.
17. Pull out reverse fork rod then remove reverse shift fork.

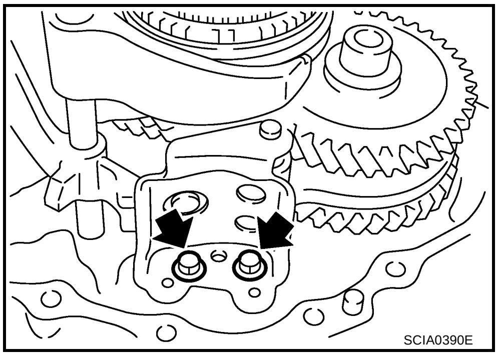
SCIA0390E

18. Shift 3rd-4th fork rod to 3rd position. Remove retaining pin of 5th shift fork using a pin punch.

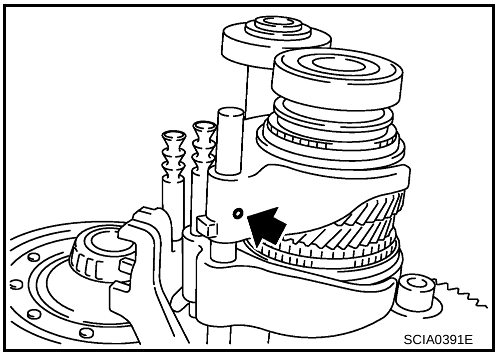
SCIA0391E

19. Remove stopper rings for 5th-reverse bracket.
20. Pull out 5th-reverse fork rod and remove 5th shift fork and 5th-reverse bracket.
21. Remove check balls (2 pieces) from clutch housing.

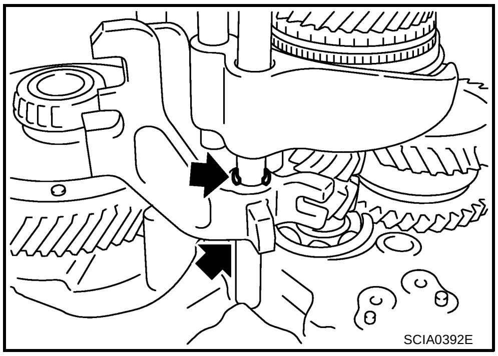
SCIA0392E

22. Remove retaining pin of 3rd-4th bracket using a pin punch.
23. Remove stopper rings for 3rd-4th shift fork.
24. Pull out 3rd-4th fork rod and remove 3rd-4th shift fork and 3rd-4th bracket.
25. Remove interlock pin and shift check sleeve from clutch housing.

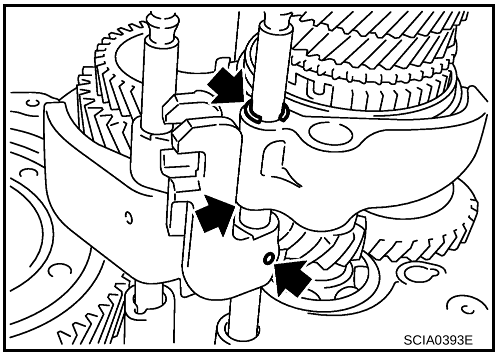
SCIA0393E

26. Remove retaining pin of 1st-2nd shift fork using a pin punch.
27. Pull out 1st-2nd fork rod with 1st-2nd bracket.
28. Remove 1st-2nd shift fork.
29. Remove retaining pin of 1st-2nd bracket using a pin punch and separate 1st-2nd fork rod and 1st-2nd bracket.

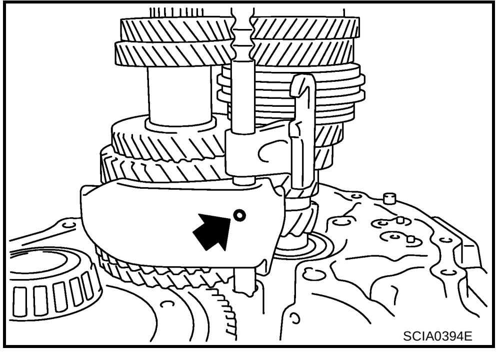
SCIA0394E

30. Remove gear components from clutch housing in the following procedure.
a. Remove input shaft assembly, mainshaft assembly and reverse idler gear assembly as a set, tapping input shaft with plastic hammer.

CAUTION:
Always withdraw mainshaft straight out. Failure to do so can damage resin oil channel on clutch housing side.

b. Remove final drive assembly.

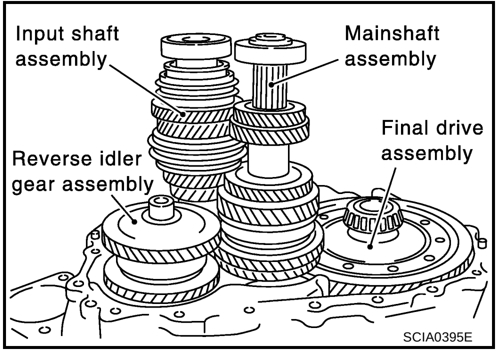

SCIA0395E

31. Remove mainshaft bearing retainer and then mainshaft front bearing from clutch housing using the puller.
32. Remove oil channel from clutch housing.

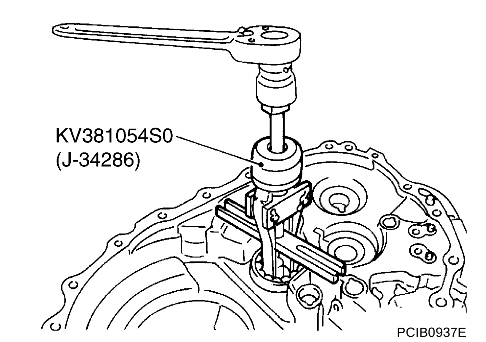

PCIB0937E

33. Remove differential side oil seal from clutch housing.

CAUTION:
Be careful not to damage clutch housing.

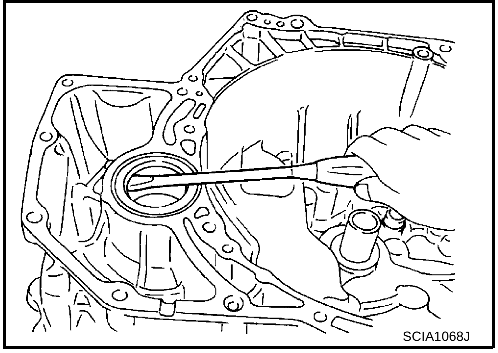
SCIA1068J

34. Remove differential side bearing outer race from clutch housing using the puller.

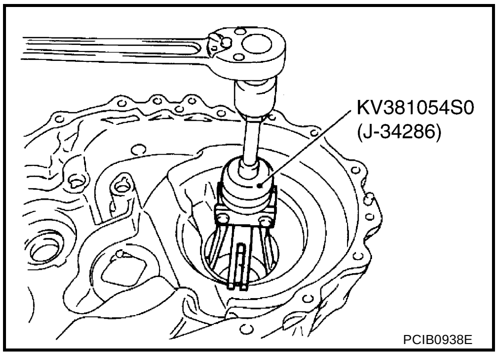

PCIB0938E

35. Remove input shaft oil seal from clutch housing.
    CAUTION:
    Be careful not to damage clutch housing.

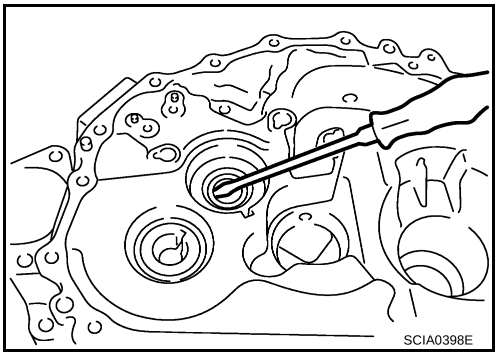

ASSEMBLY

1. Install input shaft oil seal to clutch housing using the drift.

   Dimension "A": 1.8 - 2.8 mm (0.071 - 0.110 in)

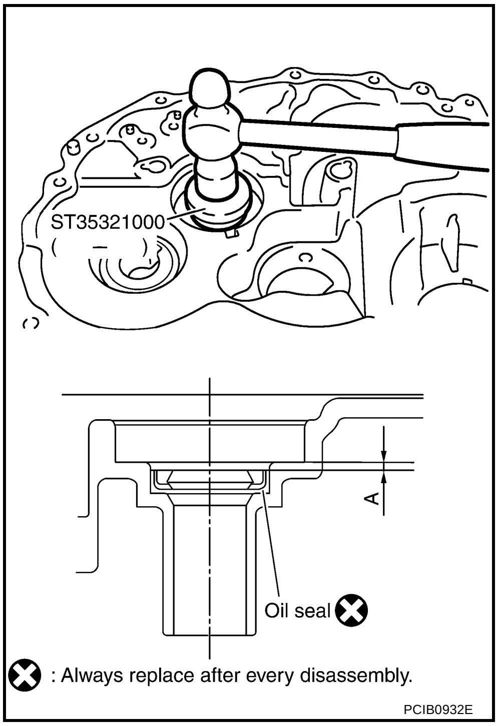

2. Install differential side oil seal until it become flush with end face of clutch housing using the drift.
   CAUTION:
   - **Do not reuse differential side oil seal.**
   - **Apply multi-purpose grease onto oil seal lip.**

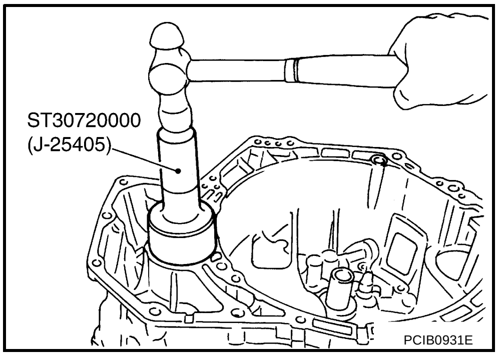

3. Install oil channel on mainshaft side.
   CAUTION:
   Be careful with the orientation of installation.

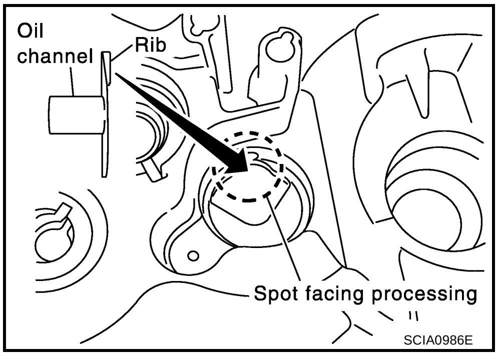

4. Install mainshaft front bearing to clutch housing using the drift.
CAUTION:
Be careful with the orientation of installation.

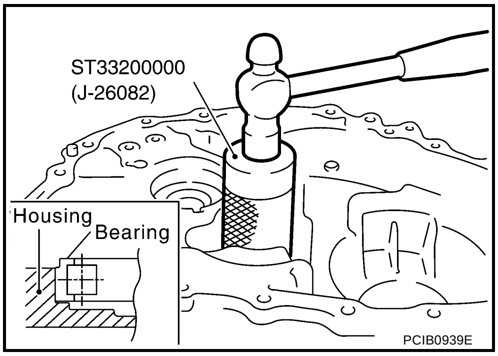

5. Install mainshaft bearing retainer to clutch housing and tighten mounting bolt to the specified torque. Refer to MT-20, "Gear Components" .
CAUTION:
Install with punched surface facing up.

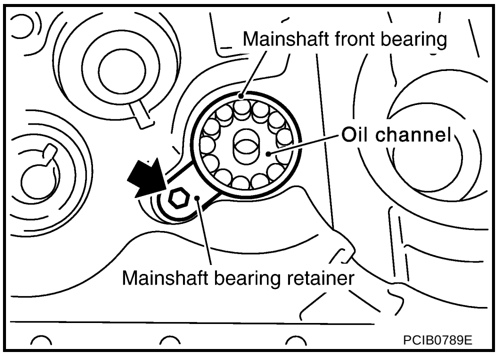

6. Install differential side bearing outer race to clutch housing using the drifts.

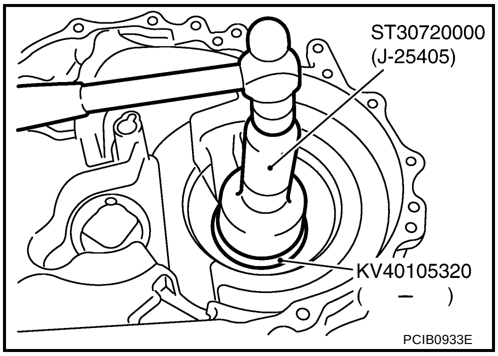

7. Install final drive assembly into clutch housing.

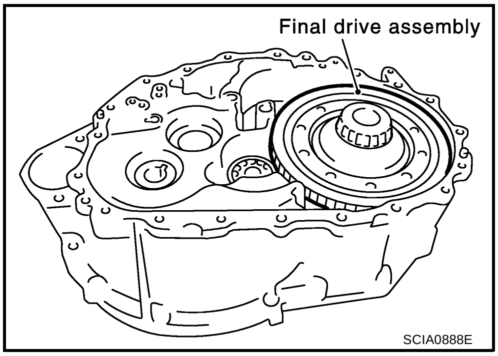

8. Install input shaft assembly, mainshaft assembly, and reverse idler gear assembly into clutch housing.
CAUTION:
Be sure not to damage input shaft oil seal.

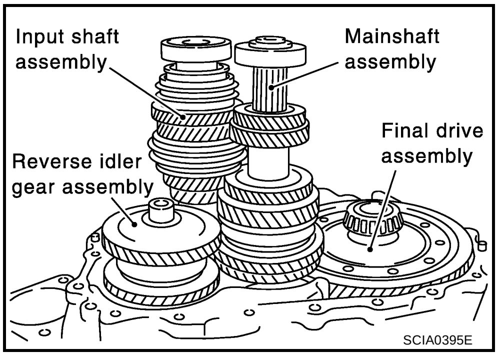

9. Install 1st-2nd bracket onto 1st-2nd fork rod, and then install retaining pin to 1st-2nd bracket.
   CAUTION:
   Do not reuse retaining pin.

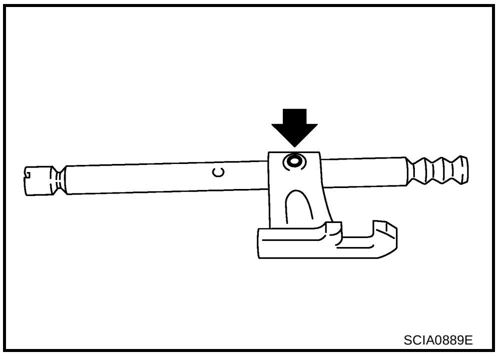
SCIA0889E

10. Install 1st-2nd fork rod and 1st-2nd shift fork, and then install retaining pin to1st-2nd shift fork.
    CAUTION:
    Do not reuse retaining pin.
11. Install shift check sleeve to clutch housing.

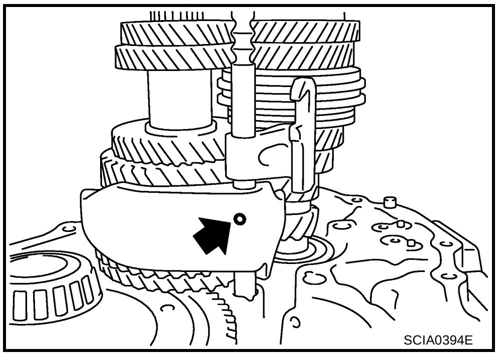
SCIA0394E

12. Install interlock pin to 3rd-4th fork rod.
13. Install 3rd-4th bracket, 3rd-4th shift fork, and 3rd-4th fork rod.
14. Install stopper rings onto 3rd-4th shift fork.
    CAUTION:
    Do not reuse stopper ring.
15. Install retaining pin onto 3rd-4th bracket.
    CAUTION:
    Do not reuse retaining pin.
16. Install 2 check balls to clutch housing.

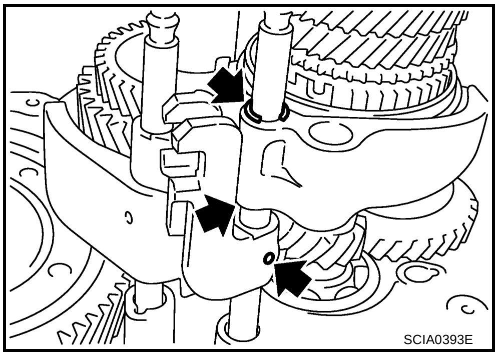
SCIA0393E

17. Install 5th-reverse bracket, 5th shift fork, and 5th-reverse fork rod.
18. Install stopper rings onto 5th-reverse bracket.
    CAUTION:
    Do not reuse stopper ring.

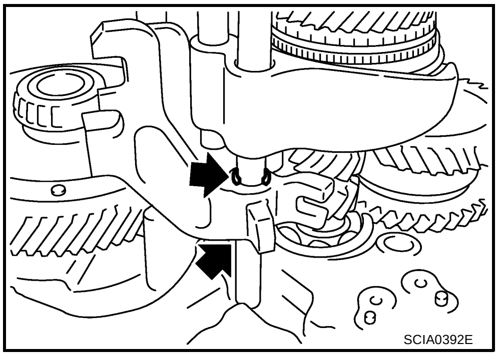
SCIA0392E

19. Install retaining pin onto 5th shift fork.
    CAUTION:
    Do not reuse retaining pin.
20. Install reverse shift fork and reverse fork rod.
21. Install reverse lever assembly following the procedures below.
a. Install shifter cap onto reverse lever assembly cam, and then install them onto reverse shift fork.
   CAUTION:
   Do not drop shifter cap.

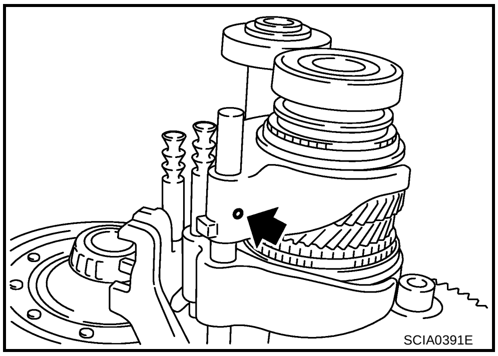
SCIA0391E

b. While lifting reverse shift fork, align cam with 5th-reverse bracket.

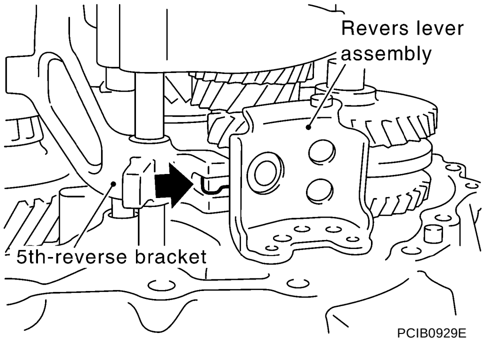

PCIB0929E

c. Install reverse lever assembly to clutch housing, and then tighten mounting bolts to the specified torque. Refer to MT-22, "Shift Control Components" .

22. Install check ball, shift check sleeve, check spring and check plug to clutch housing.

CAUTION:

- **Do not reuse check plug.**
- **Do not drop check ball.**

23. Install the magnet onto clutch housing.

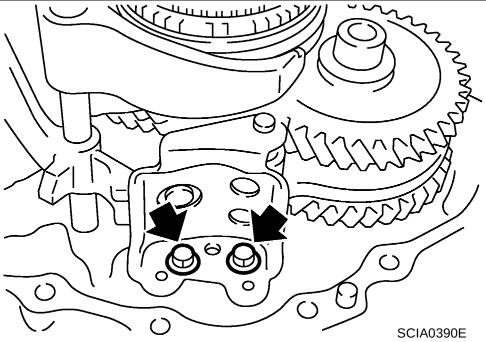
SCIA0390E

24. Install differential side oil seal until it is flush with end face of transaxle case using the drift.

CAUTION:

Do not reuse differential side oil seal.

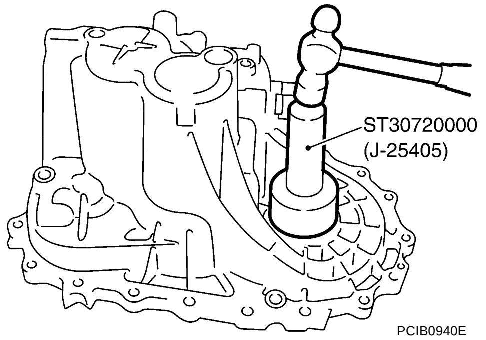

PCIB0940E

25. Install selected differential side bearing adjusting shim and differential side bearing outer race.
    - For selection of adjusting shim, refer to MT-33, "Differential Side Bearing Preload" .
26. Install selected reverse idler gear adjusting shim onto reverse idler gear assembly.
    - For selection of adjusting shims, refer to MT-34, "Reverse Idler Gear End Play" .
27. Install selected input shaft rear bearing adjusting shim onto input shaft.
    - For selection of adjusting shims, refer to MT-34, "Input Shaft End Play" .
28. Install baffle plate and oil gutter to transaxle case.
29. Install transaxle case following the procedures below.

a. Install selected mainshaft rear bearing adjusting shim into transaxle case.

- For selection of adjusting shims, refer to MT-35, "Mainshaft End Play" .

b. Temporarily install snap ring of mainshaft rear bearing into transaxle case.

CAUTION:

Do not reuse snap ring.

c. Apply recommended sealant to mating surfaces of transaxle case and clutch housing.

- **Use Genuine Silicone RTV or equivalent. Refer to GI-48, "Recommended Chemical Products and Sealants" .**

CAUTION:

Remove old sealant adhering to the mounting surfaces. Also remove any moisture, oil, or foreign material adhering to both mounting surfaces.

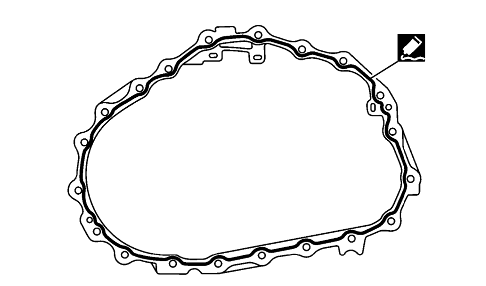

PCIB0917E

d. With snap ring of mainshaft rear bearing temporarily installed, place transaxle case over clutch housing.

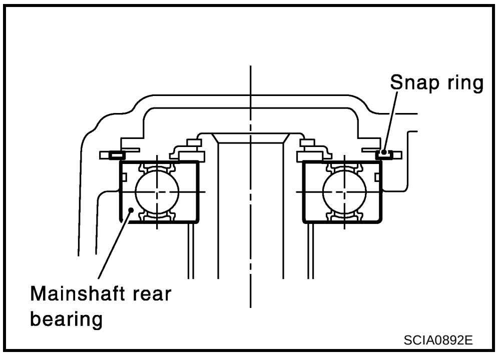

e. Lift up mainshaft assembly from the control assembly mounting hole through the bore plug mounting hole with snap ring stretched.

f. Securely install snap ring onto mainshaft rear bearing.

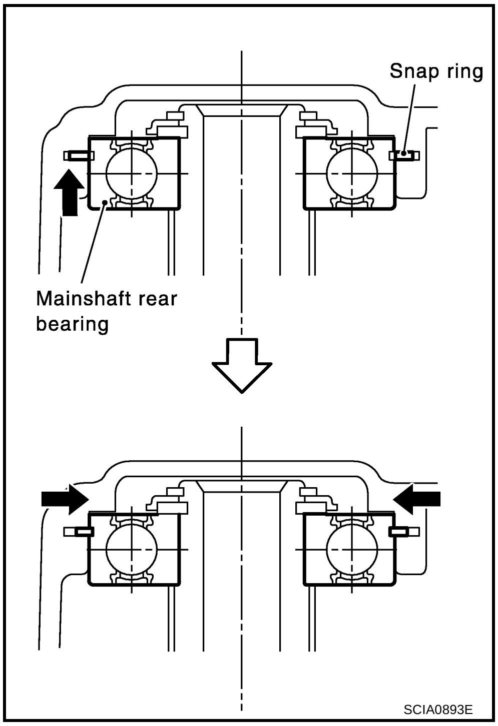

g. Tighten the mounting bolts to the specified torque.

Bolt A:

: 52 N·m (5.3 kg-m, 38 ft-lb)

Bolt B:

: 65 N·m (6.6 kg-m, 48 ft-lb)

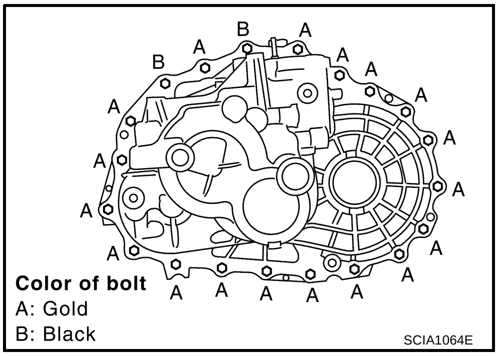

CAUTION:
Always replace bolts B as they are self-sealing bolts.

h. Apply gear oil to O-ring and install it to control assembly. Then install control assembly to transaxle case. Tighten bolts to the specified torque. Refer to MT-22, "Shift Control Components" .

CAUTION:
Do not reuse O-ring.

i. Install shift check to transaxle case, and then tighten shift check to the specified torque. Refer to MT-22, "Shift Control Components" .

CAUTION:
Do not reuse shift check.

j. Install stopper bolt to transaxle case, and then tighten stopper bolt to the specified torque. Refer to MT-22, "Shift Control Components" .

CAUTION:
Do not reuse stopper bolt.

30. Install bore plug to transaxle case using the drift.
    CAUTION:
    Do not reuse bore plug.

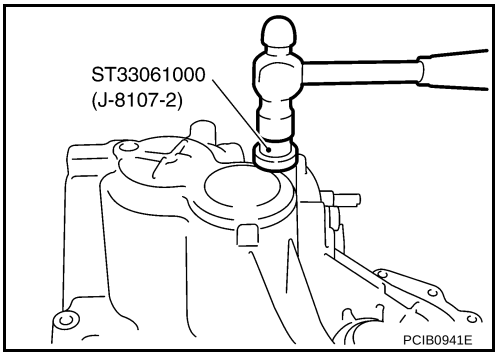

31. Install welch plug to transaxle case using the drift.
    CAUTION:
    Do not reuse welch plug.

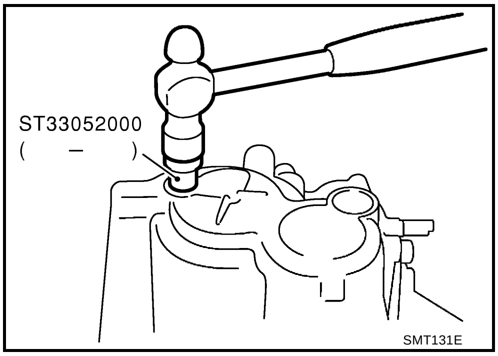

32. Install 2 check balls, 2 check springs and 2 check plugs to transaxle case, and then tighten check plug to the specified torque. Refer to MT-22, "Shift Control Components" .
    CAUTION:
    Do not reuse check plug.

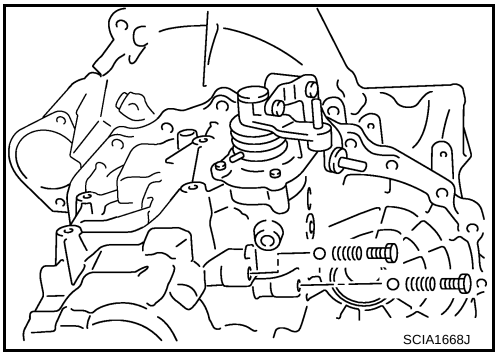

33. Apply recommended sealant to threads of park/neutral position (PNP) switch and back-up lamp switch. Then install them to transaxle case and tighten to the specified torque. Refer to MT-19, "Case and Housing Components" .
    - **Use Genuine Silicone RTV or equivalent. Refer to GI-48, "Recommended Chemical Products and Sealants" .**
34. Install gaskets onto drain plug and plug, and then install them to transaxle case. Refer to MT-19, "Case and Housing Components" .
    CAUTION:
    Do not reuse gasket.

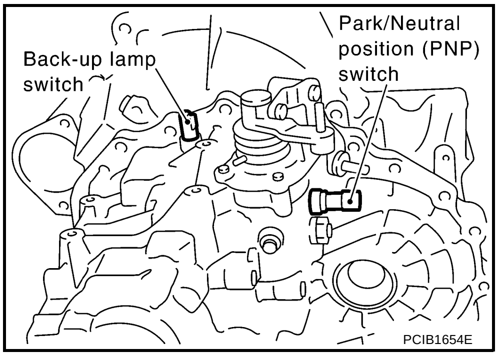

35. Install gasket onto filler plug, and then install it to clutch housing. Refer to MT-19, "Case and Housing Components" .
    CAUTION:
    - **Do not reuse gasket.**
    - **After oil is filled, tighten filler plug to specified torque.**

ADJUSTMENT

Differential Side Bearing Preload

- When adjusting differential side bearing preload, select adjusting shim for differential side bearing. To select adjusting shim, measure the clearance "L" between transaxle case and differential side bearing outer race. Refer to MT-64, "DIFFERENTIAL SIDE BEARING ADJUSTING SHIM(S)" .

  CAUTION:

  Up to 2 adjusting shims can be selected.

- Calculate the dimension "L" (thickness of adjusting shim) using the following procedure to satisfy specification of preload for differential side bearing.

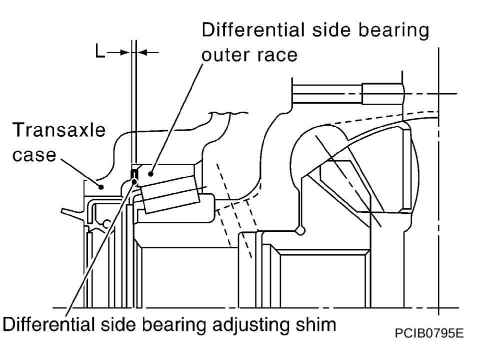

PCIB0795E

Preload: 0.15 - 0.21 mm (0.0059 - 0.0083 in)

Dimension "L" = (L_1 - L_2) + Preload

L: Thickness of adjusting shim

L_1 : Distance between transaxle case end face and mounting face of adjusting shim

L_2 : Distance between differential side bearing outer race and clutch housing end face

1. Using depth micrometer and straightedge, measure the dimension "L_1" between transaxle case end face and mounting face of adjusting shim.
2. Install differential side bearing outer race onto differential side bearing on final gear side. Holding lightly differential side bearing outer race horizontally by hand, rotate final gear five times or more (for smooth movement of bearing roller).

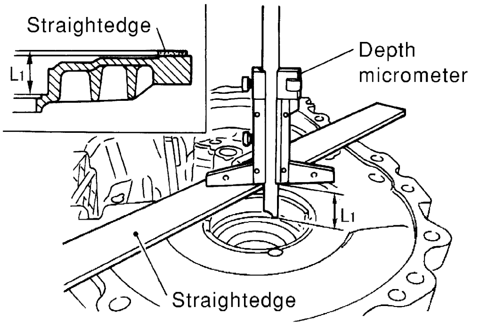

SCIA1078E

3. Using depth micrometer and straightedge as shown in the figure, measure the dimension "L_2" between differential side bearing outer race and clutch housing end face.

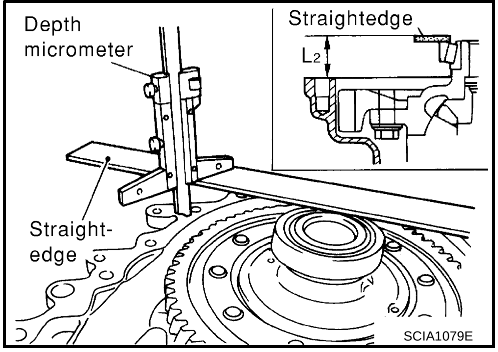

SCIA1079E

4. Install selected differential side bearing adjusting shim, and then install differential side bearing outer race using the drift.

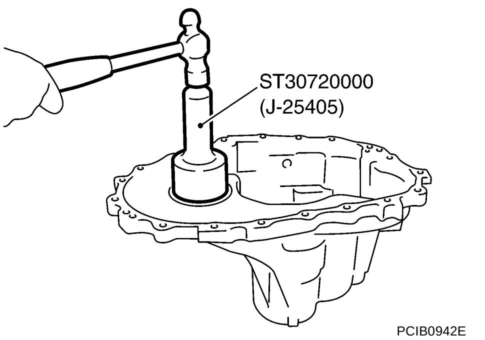

PCIB0942E

Reverse Idler Gear End Play

- When adjusting reverse idler gear end play, select adjusting shim for reverse idler gear. To select adjusting shim, measure the clearance between transaxle case and reverse idler gear. Refer to MT-64, "REVERSE IDLER GEAR ADJUSTING SHIM" .

  CAUTION:

  Only 1 adjusting shim can be selected.

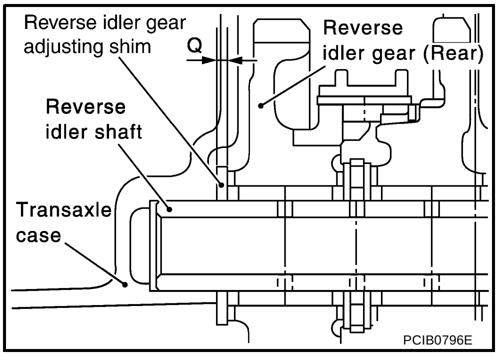

- Calculate the dimension "Q" (thickness of adjusting shim) using the following procedure to satisfy specification of end play for reverse idler gear.

End play: 0.04 - 0.10 mm (0.0016 - 0.0039 in)

Dimension "Q" = (Q_1 - Q_2) - End play

Q: Thickness of adjusting shim

Q_1 : Distance between transaxle case end face and mounting face of adjusting shim

Q_2 : Distance between clutch housing end face and end face of reverse idler gear (Rear)

1. Using depth micrometer and straightedge, measure the dimension "Q_1 " between transaxle case end face and mounting face of adjusting shim.

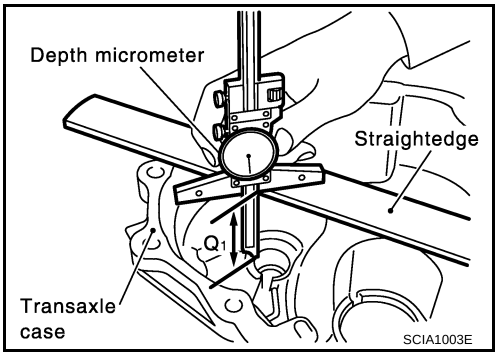

2. Using depth micrometer and straightedge as shown in the figure, measure the dimension "Q_2 " between clutch housing end face and end face of reverse idler gear (Rear).
3. Install selected reverse idler gear adjusting shim onto reverse idler gear assembly.

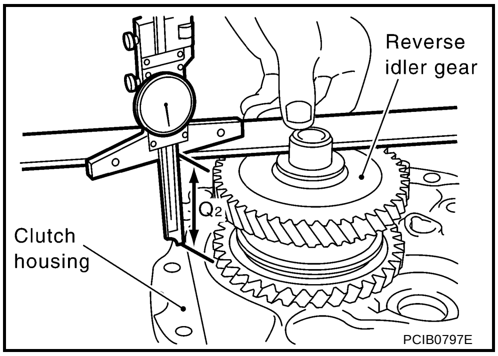

Input Shaft End Play

- When adjusting input shaft end play, select adjusting shim for input shaft rear bearing. To select adjusting shim, measure the clearance between transaxle case and input shaft rear bearing. Refer to MT-63, "INPUT SHAFT REAR BEARING ADJUSTING SHIM" .

  CAUTION:

  Only 1 adjusting shim can be selected.

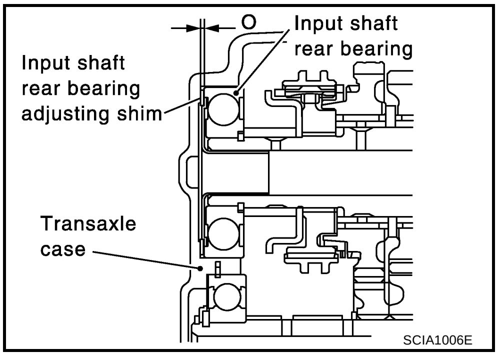

- Calculate the dimension "O" (thickness of adjusting shim) using the following procedure to satisfy specification of end play for input shaft rear bearing.

End play: 0 - 0.06 mm (0 - 0.0024 in)

Dimension "O" = (O_1 - O_2) - End play

O: Thickness of adjusting shim

O_1 : Distance between transaxle case end face and mounting face of adjusting shim

O_2 : Distance between clutch housing end face and end face of input shaft rear bearing

1. Using depth micrometer and straightedge, measure the dimension "O_1 " between transaxle case end face and mounting face of adjusting shim.

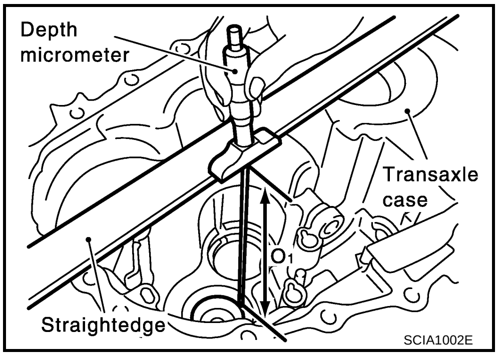

2. Using depth micrometer and straightedge as shown in the figure, measure the dimension "O_2 " between clutch housing end face and end face of input shaft rear bearing.
3. Install selected input shaft rear bearing adjusting shim onto input shaft.

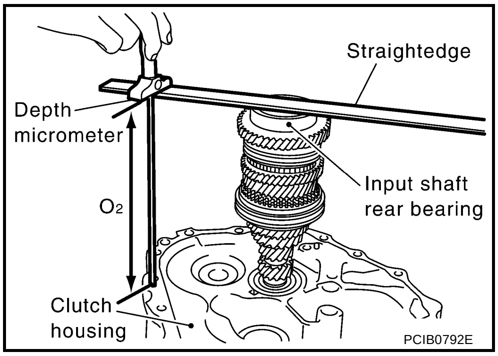

Mainshaft End Play

- When adjusting mainshaft end play, select adjusting shim for mainshaft rear bearing. To select adjusting shim, measure the clearance "M" between transaxle case and mainshaft rear bearing. Refer to MT-63, "MAINSHAFT REAR BEARING ADJUSTING SHIM" .

  CAUTION:
  Only 1 adjusting shim can be selected.
- Calculate the dimension "P" (thickness of adjusting shim) using the following procedure to satisfy specification of end play for mainshaft rear bearing.

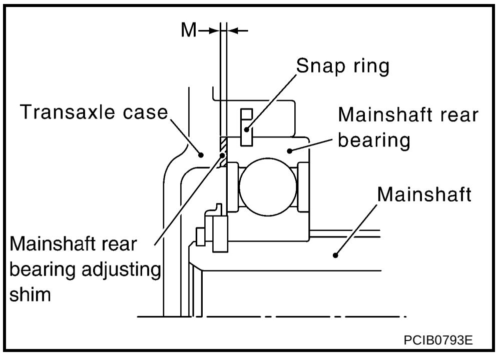

End play: 0 - 0.06 mm (0 - 0.0024 in)

Dimension "P" = "M" - End play

P: Thickness of adjusting shim

M: Distance between mainshaft rear bearing end face and transaxle case end face

1. Install mainshaft assembly to clutch housing.
2. Install snap ring to transaxle case.
3. Install transaxle case to clutch housing, and temporarily assemble them with fixing bolts. Install temporarily snap ring to mainshaft rear bearing.

4. Install dial indicator to bore plug mounting hole, and expand snap ring. Lift mainshaft assembly through control assembly installation hole, and push it against transaxle case. This state shall be defined as base. Moving distance of mainshaft assembly, with snap ring fit on main rear bearing, becomes “M”.

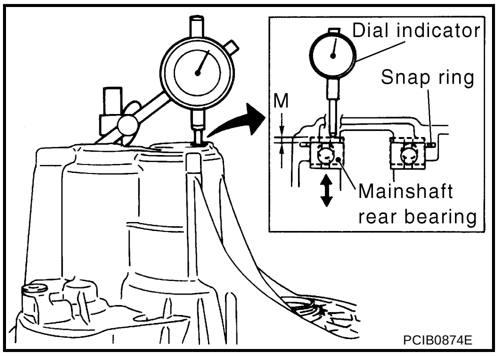

INPUT SHAFT AND GEARS

PFP:32200

Disassembly and Assembly

ACS007YG

DISASSEMBLY

1. Before disassembling, measure end play for 3rd, 4th, and 5th input gears.

   End play standard value

3rd input gear:	**0.18 - 0.31 mm (0.0071 - 0.0122 in)**
4th input gear:	**0.20 - 0.30 mm (0.0079 - 0.0118 in)**
5th input gear:	**0.06 - 0.16 mm (0.0024 - 0.0063 in)**

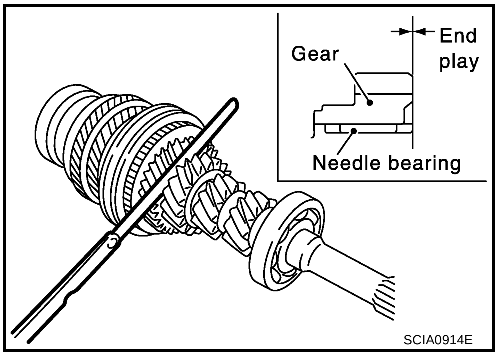

SCIA0914E

2. Remove oil channel.
3. Press out input shaft rear bearing using the drift and a puller.

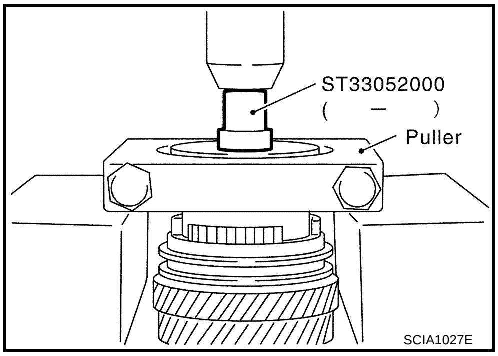

SCIA1027E

4. Remove snap ring.

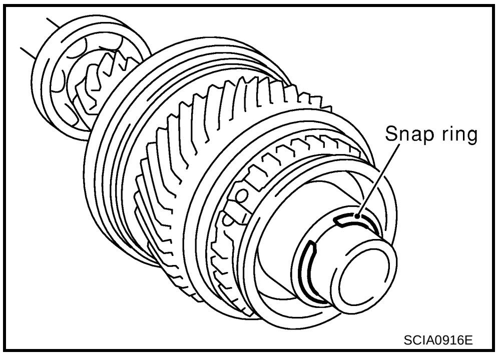

SCIA0916E

5. Press out input shaft bearing spacer and 5th stopper using the drift and a puller.

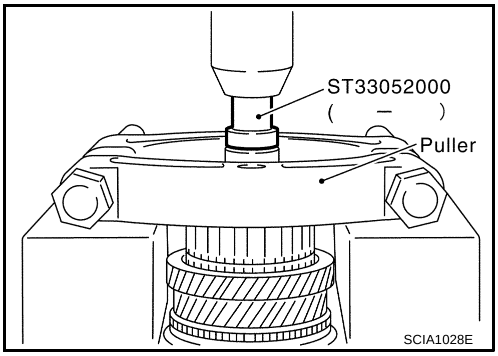

SCIA1028E

6. Press out 5th input gear and 5th synchronizer hub assembly using the drift and a puller.
7. Remove 5th needle bearing.

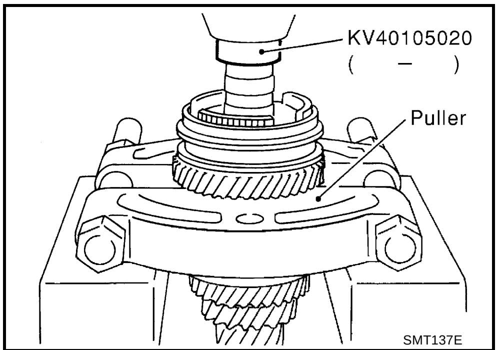

SMT137E

8. Press out 5th input gear bushing, thrust washer, 4th input gear, 4th needle bearing, 4th input gear bushing, 3rd-4th synchronizer hub assembly and 3rd input gear using the drift and a puller.
9. Remove 3rd needle bearing.

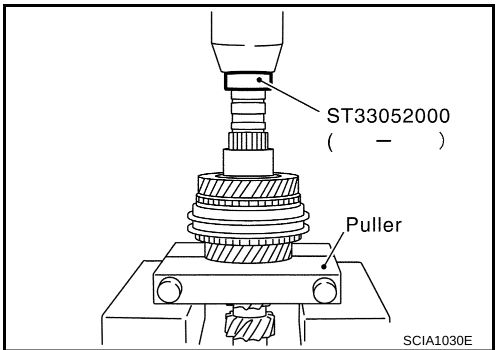

SCIA1030E

10. Press out input shaft front bearing using a puller.

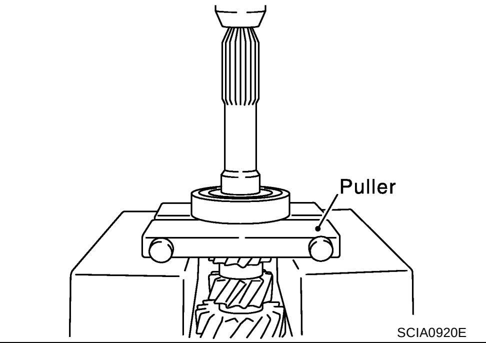

SCIA0920E

INSPECTION AFTER DISASSEMBLY

Input Shaft and Gears

Check items below. If necessary, replace them with new ones.

- Damage, peeling, dent, uneven wear, bending, and other non-standard conditions of the shaft.
- Excessive wear, damage, peeling, and other non-standard conditions of the gears.

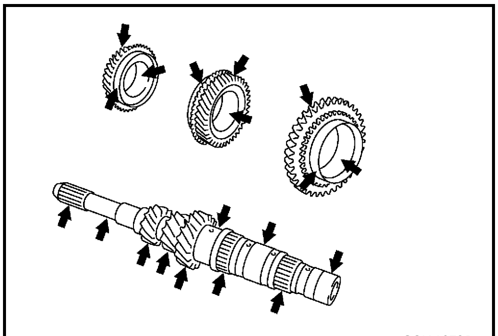
SCIA1073J

Synchronizer

Check items below. If necessary, replace them with new ones.

- Damage and excessive wear of contact surfaces of coupling sleeve, synchronizer hub and shifting insert
- Coupling sleeve and synchronizer hub must move smoothly.

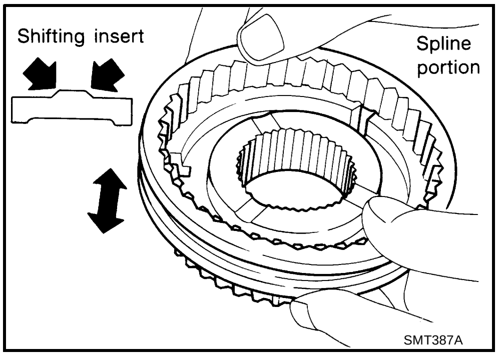

- If any crack, damage, or excessive wear is found on cam face of baulk ring or working face of insert, replace it.

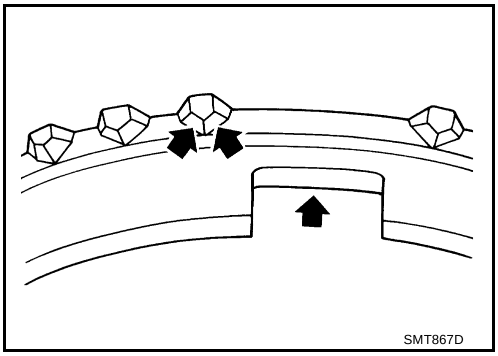

BAULK RING CLEARANCE

- **Single-cone synchronizer (4th and 5th)**
  Push baulk ring on the cone, and measure the clearance between baulk ring and cone. If measurement is below limit, replace it with a new one.

Clearance

Standard value

4th:	**0.9 - 1.45 mm (0.035 - 0.057 in)**
5th:	**0.95 - 1.4 mm (0.037 - 0.055 in)**
Limit value:	**0.7 mm (0.028 in)**

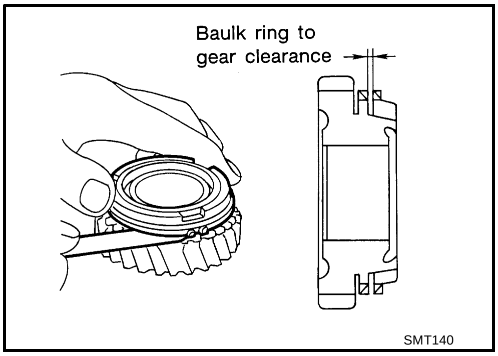

- **Double-cone synchronizer (3rd)**
  Check the clearance between outer baulk ring, synchronizer cone and inner baulk ring as follows.

  CAUTION:
  The clearances "A" and "B" are controlled with outer baulk ring, synchronizer cone and inner baulk ring as a set. Replace them as a set if the clearances are outside the limit value.

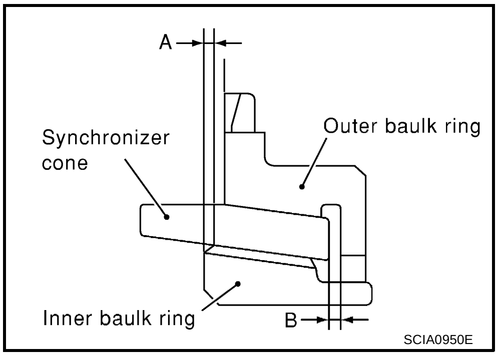

1. Measure the clearance “A” at 2 points or more diagonally opposite using a dial indicator. And then calculate mean value.

Clearance “A”

Standard value:	**0.6 - 0.8 mm (0.024 - 0.031 in)**
Limit value:	**0.2 mm (0.008 in)**

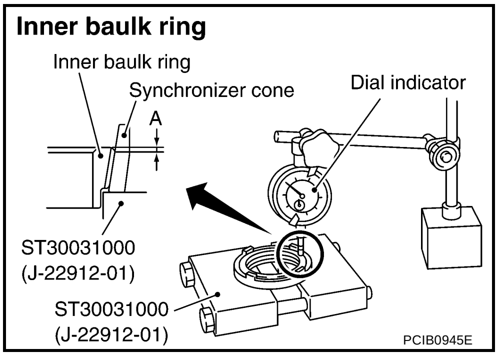

2. Measure the clearance “B” at 2 points or more diagonally opposite using a feeler gauge. And then calculate mean value.

Clearance “B”

Standard value:	**0.6 - 1.1 mm (0.024 - 0.043 in)**
Limit value:	**0.2 mm (0.008 in)**

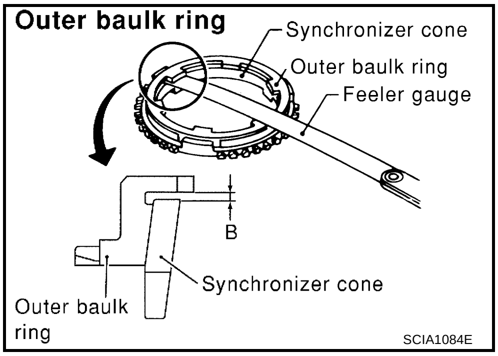

Bearing

Check items below. If necessary, replace them with new ones.

- Damage and rough rotation of bearing

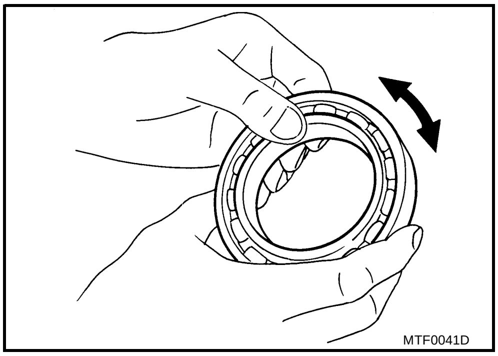

ASSEMBLY

1. Install 3rd needle bearing to input shaft.
2. Install 3rd input gear, 3rd inner baulk ring, 3rd synchronizer cone and 3rd outer baulk ring to input shaft.
3. Install 3rd-4th spread spring, 3rd-4th shifting insert and 3rd-4th synchronizer hub onto 3rd-4th coupling sleeve.

   CAUTION:
   - **Be careful with the orientation of 3rd-4th synchronizer hub.**
   - **Do not reuse 3rd-4th synchronizer hub.**

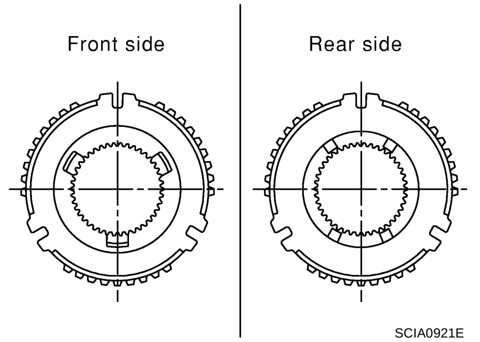

SCIA0921E

   - **Be careful with the orientation of 3rd-4th coupling sleeve.**
   - **Do not reuse 3rd-4th coupling sleeve.**

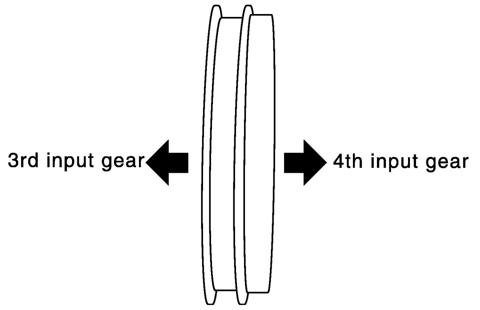

PCIB0799E

   - **Be sure not to hook center projection of 2 spread springs on same shifting insert.**

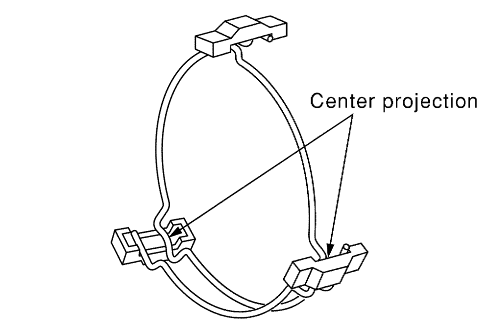

SCIA1083E

4. Press in 3rd-4th synchronizer hub assembly using the press stand.

   CAUTION:
   Align grooves of 3rd-4th shifting insert and 3rd outer baulk ring.

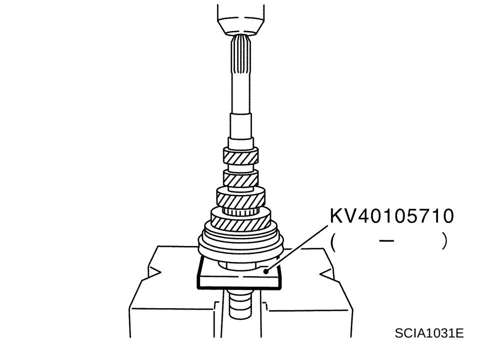

SCIA1031E

5. Press in 4th input gear bushing using the press stand.
6. Install 4th baulk ring.
7. Install 4th needle bearing and 4th input gear to input shaft.

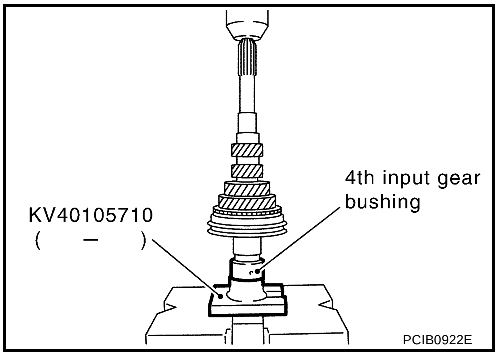

PCIB0922E

8. Select thrust washer so that the dimension “C2” satisfies the standard value below. Then install thrust washer onto input shaft. Refer to MT-62, "INPUT SHAFT THRUST WASHER" .

   Standard for dimension “C2”:

   154.7 - 154.8 mm (6.091 - 6.094 in)

   CAUTION:
   Only one thrust washer can be selected.

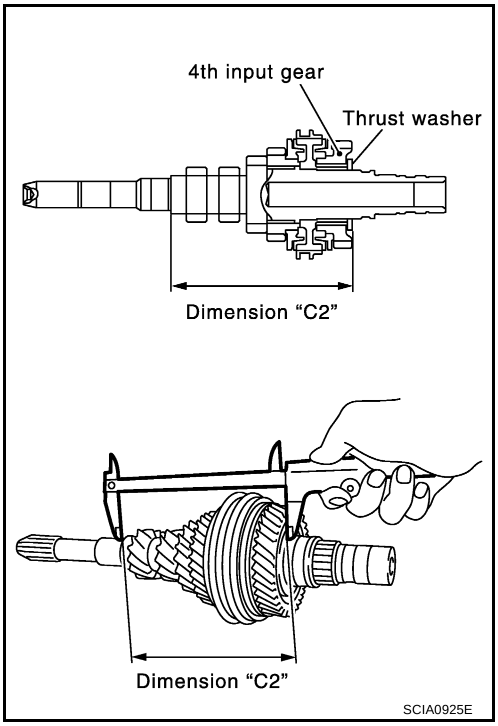

SCIA0925E

9. Press in 5th input gear bushing using the press stand.
   CAUTION:
   Do not reuse 5th input gear bushing.
10. Install 5th needle bearing and 5th input gear to input shaft.
11. Install 5th baulk ring.

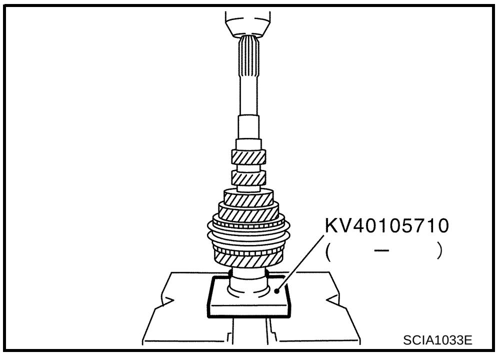

SCIA1033E

12. Install 5th synchronizer hub and 5th spread spring, 5th shifting insert onto 5th coupling sleeve.

CAUTION:

- **Be careful with the orientation of 5th synchronizer hub and shifting insert.**
- **Do not reuse 5th synchronizer hub.**

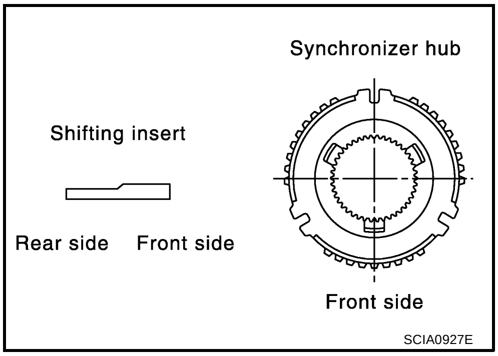

- **Be careful with the orientation of 5th coupling sleeve.**
- **Do not reuse 5th coupling sleeve.**

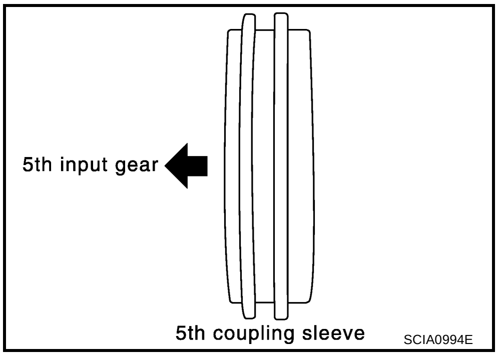

- **Be sure not to hook center projection of 2 spread springs on same shifting insert.**

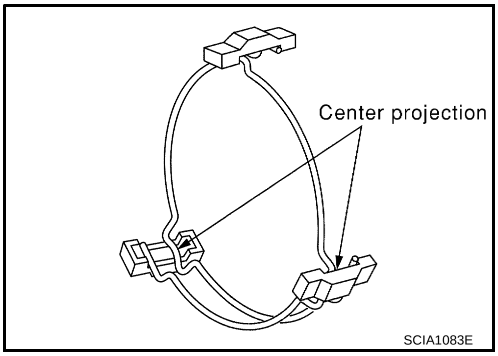

13. Press in 5th synchronizer hub assembly using the press stand.

CAUTION:

Align grooves of 5th shifting insert and 5th baulk ring.

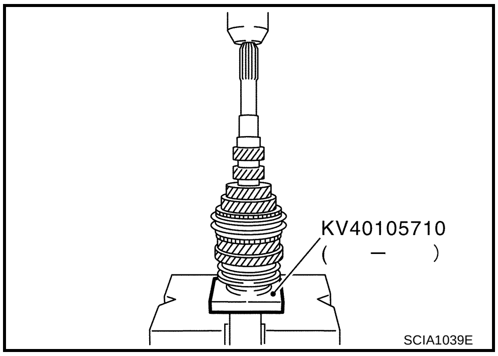

14. Press in 5th stopper and then input shaft bearing spacer using the drift.

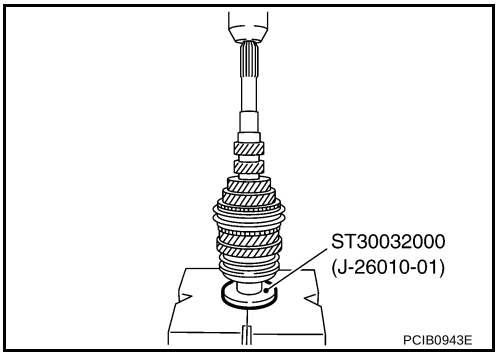

15. Install snap ring onto input shaft, and make sure that end play (gap between snap ring and groove) of input shaft bearing spacer satisfies the standard value.

    End play standard value: 0 - 0.1 mm (0 - 0.004 in)

    - If the measurement is outside the standard range, select snap ring. Refer to MT-61, "INPUT SHAFT BEARING SPACER" .

      CAUTION:
      Do not reuse snap ring.

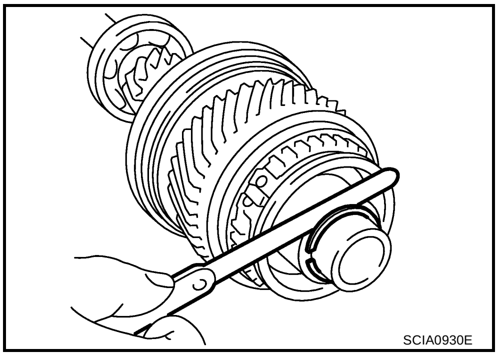

16. Press in input shaft rear bearing using the drift.

    CAUTION:
    Install input shaft rear bearing with its brown surface facing the input gear side.

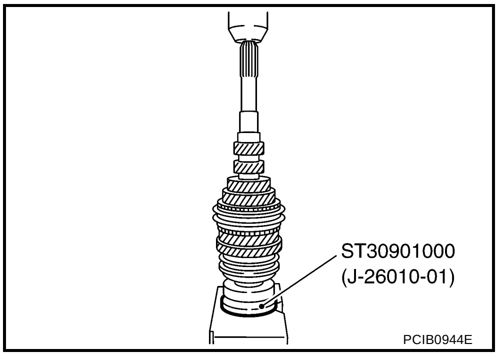

17. Press in input shaft front bearing using the drifts.
18. Install oil channel onto input shaft.

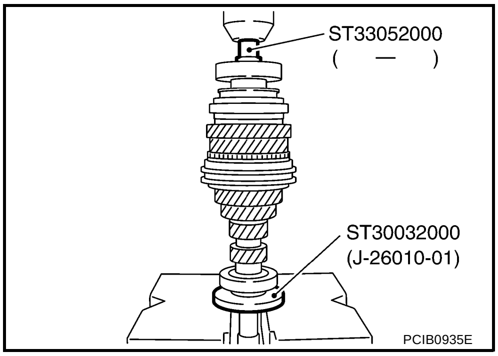

19. Check end play of 3rd, 4th, and 5th input gears.

    End play standard value

    3rd input gear: 0.18 - 0.31 mm (0.0071 - 0.0122 in)
    4th input gear: 0.20 - 0.30 mm (0.0079 - 0.0118 in)
    5th input gear: 0.06 - 0.16 mm (0.0024 - 0.0063 in)

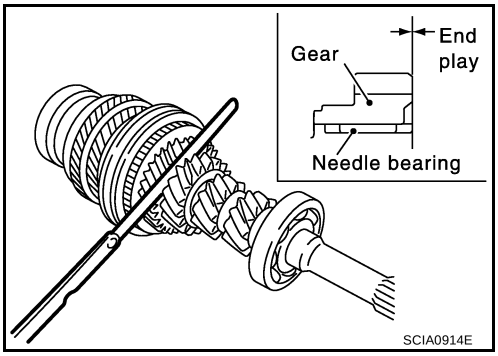

MAINSHAFT AND GEARS

PFP:32241

Disassembly and Assembly

ACS007YI

DISASSEMBLY

1. Before disassembling, measure the end play of 1st and 2nd main gears.

End play standard value

1st main gear: 0.20 - 0.30 mm (0.0079 - 0.0118 in)

2nd main gear: 0.06 - 0.16 mm (0.0024 - 0.0063 in)

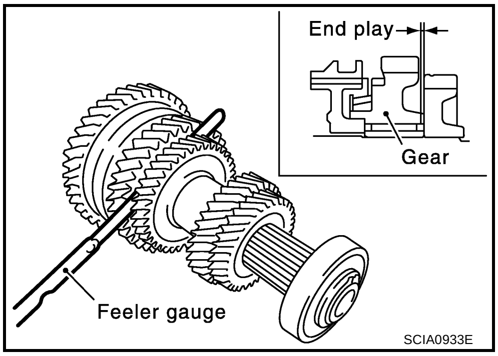

2. Remove snap ring.
3. Remove C-ring holder, and then remove mainshaft C-ring.

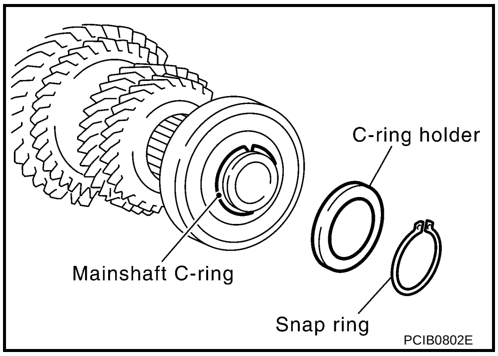

4. Remove mainshaft rear bearing using the drift and pullers.

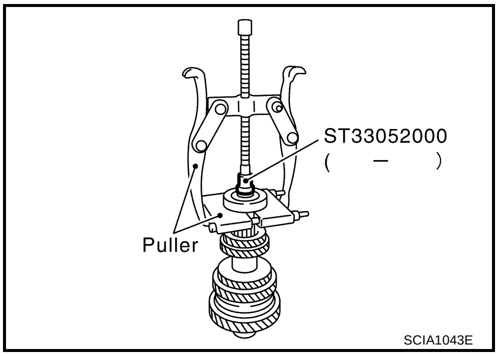

5. Remove snap ring.

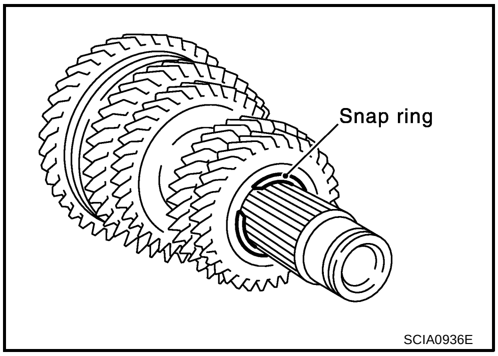

A
B
MT
D
E
F
G
H
I
J
K
L
M

6. Press out 4th main gear and 5th main gear using the drift and a puller.
7. Remove 4th main gear adjusting shim.
8. Remove 3rd-4th mainshaft spacer.

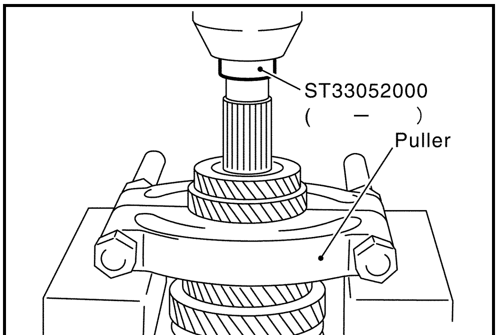

SCIA1044E

9. Press out 3rd main gear, 2nd main gear, 2nd needle bearing, 2nd main gear bushing, 1st-2nd synchronizer hub assembly, 1st main gear, 1st needle bearing, and 1st main gear bushing reverse main gear using the drift.

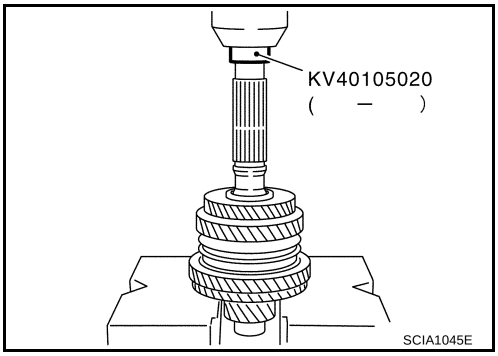

SCIA1045E

INSPECTION AFTER DISASSEMBLY

Mainshaft and Gears

Check items below. If necessary, replace them with new ones.

- Damage, peeling, dent, uneven wear, bending, and other non-standard conditions of the shaft.
- Excessive wear, damage, peeling, and other non-standard conditions of the gears.

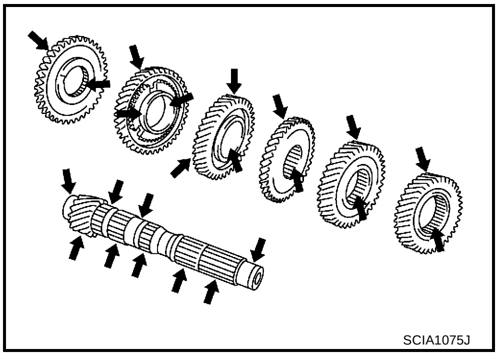
SCIA1075J

Synchronizer

Check items below. If necessary, replace them with new ones.

- Damage and unusual wear on contact surfaces of coupling sleeve, synchronizer hub, and shifting insert.
- Coupling sleeve and synchronizer hub must move smoothly.

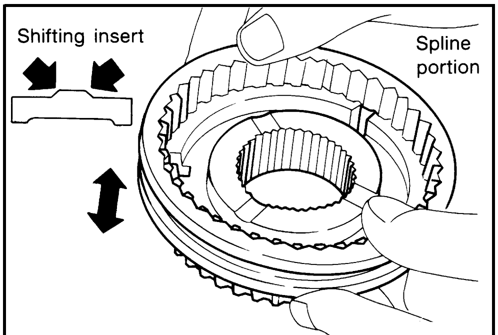

SMT387A

- If any crack, damage, or excessive wear is found on cam face of baulk ring or working face of insert, replace it.

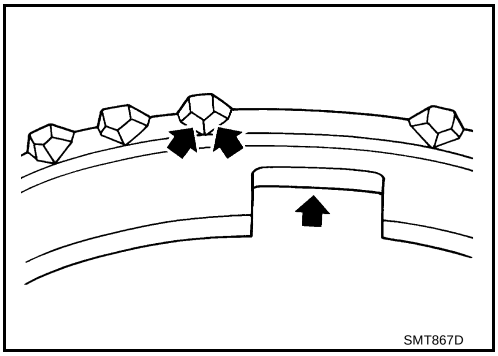

A
B
MT
D
E
F
G
H
I
J
K
L
M

BAULK RING CLEARANCE

Triple-cone synchronizer (1st and 2nd)

- Check the clearance between outer baulk ring, synchronizer cone and inner baulk ring as follows.

  CAUTION:

  The clearances "A", "B" and "C" are controlled with outer baulk ring, synchronizer cone and inner baulk ring as a set. Replace them as a set if the clearances are outside the limit value.

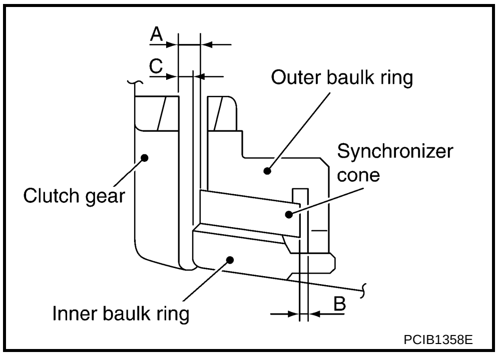

1. Measure the clearance "A" at 2 points or more diagonally opposite using a feeler gauge when pressing baulk ring toward clutch gear taper cone. And then calculate mean value.

   Clearance "A"

   Standard value: 0.6 - 1.2 mm (0.024 - 0.047 in)

   Limit value: 0.3 mm (0.012 in)

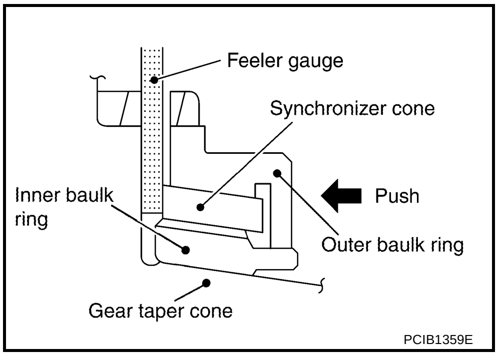

2. Measure the clearance "B" at 2 points or more diagonally opposite using a feeler gauge. And then calculate mean value.

   Clearance "B"

   Standard value: 0.6 - 1.1 mm (0.024 - 0.043 in)

   Limit value: 0.2 mm (0.008 in)

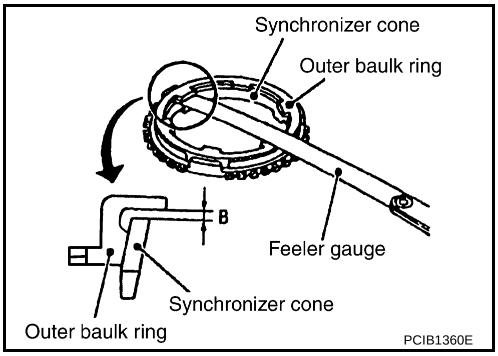

3. Measure the clearance “C” at 2 points or more diagonally opposite using a feeler gauge when pressing baulk ring toward clutch gear taper cone. And then calculate mean value.

Clearance “C”

Standard value:	**0.7 - 1.1 mm (0.028 - 0.043 in)**
Limit value:	**0.3 mm (0.012 in)**

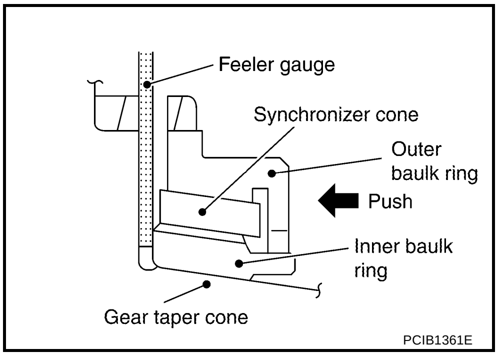

PCIB1361E

Bearing

Check items below. If necessary, replace them with new ones.

- Damage and rough rotation of bearing

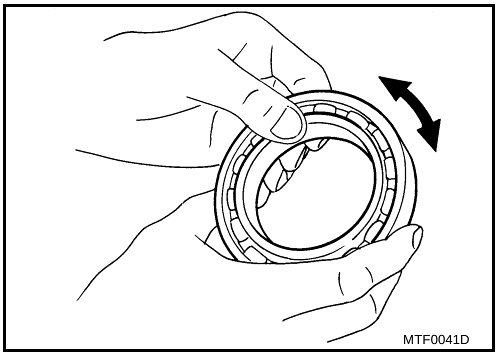

MTF0041D

ASSEMBLY

1. Press in reverse main gear using the drifts and the press stand.

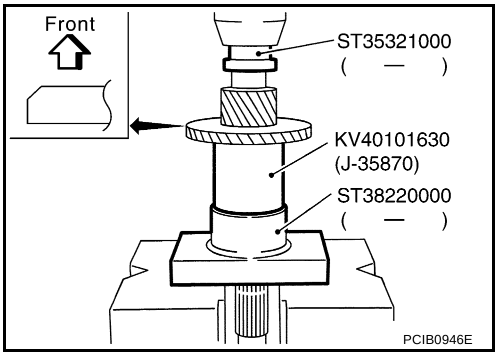

PCIB0946E

CAUTION:

- **Be careful with the orientation of reverse main gear.**
- **Do not reuse reverse main gear.**

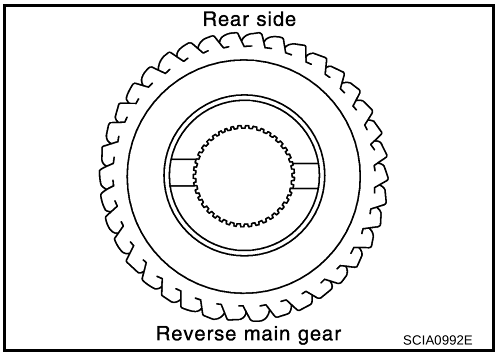

SCIA0992E

2. Press in 1st main gear bushing using the drifts and the press stand.
3. Install 1st needle bearing, and then 1st main gear.

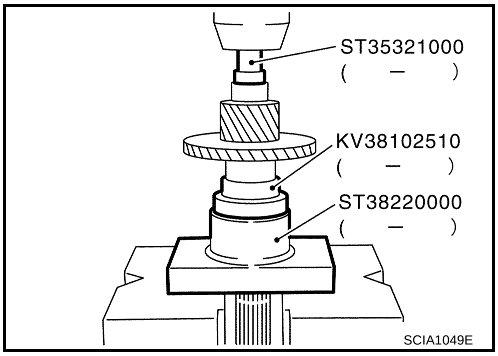

4. Install 1st-2nd spread spring, 1st-2nd shifting insert and 1st-2nd synchronizer hub onto 1st-2nd coupling sleeve.

CAUTION:

- **Be careful with the orientation of 1st-2nd synchronizer hub.**
- **Do not reuse 1st-2nd synchronizer hub.**

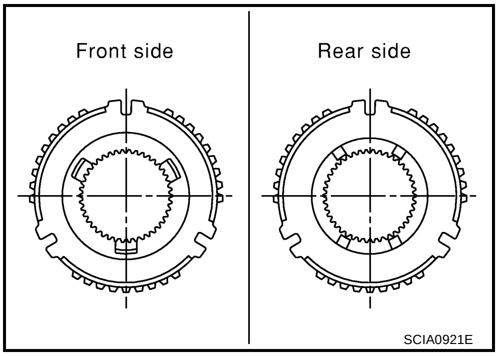

- **Be careful with the orientation of 1st-2nd coupling sleeve.**
- **Do not reuse 1st-2nd coupling sleeve.**

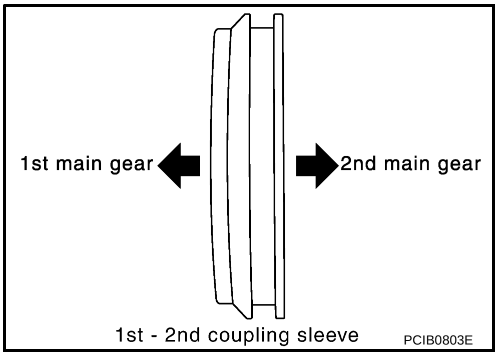

- **Be sure not to hook center projection of 2 spread springs on same 1st-2nd shifting insert.**

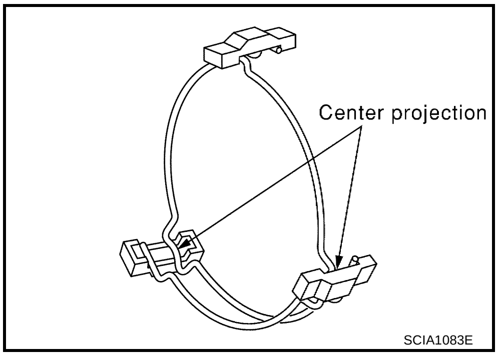

5. Install 1st inner baulk ring, 1st synchronizer cone, 1st outer baulk ring onto mainshaft, and then press in 1st-2nd synchronizer hub assembly onto mainshaft using the drifts and the press stand.

CAUTION:

- **Outer baulk ring, synchronizer cone, and inner baulk ring on 2nd gear-side must have been removed.**
- **Be careful with the orientation of coupling sleeve.**

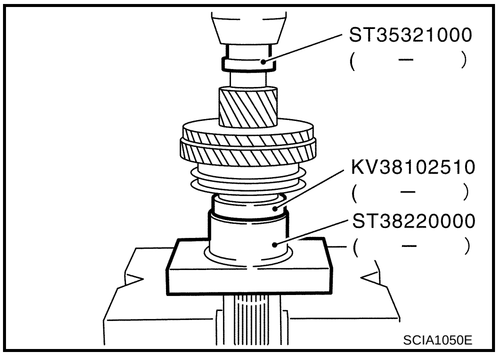

6. Press in 2nd main gear bushing using the drift and the press stand.
7. Install 2nd outer baulk ring, 2nd synchronizer cone, and 2nd inner baulk ring.
8. Install 2nd needle bearing and 2nd main gear.

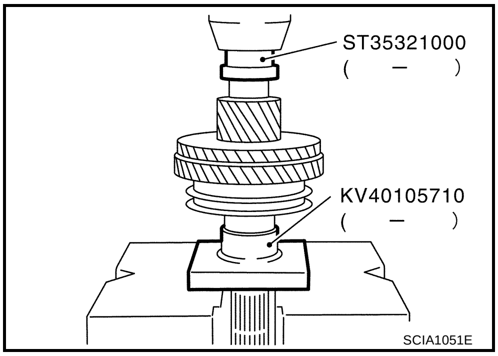

9. Press in 3rd main gear using the drift and the press stand.

CAUTION:

- **Be careful with the orientation of 3rd main gear.**
- **Do not reuse 3rd main gear.**

10. Install 3rd-4th mainshaft spacer.

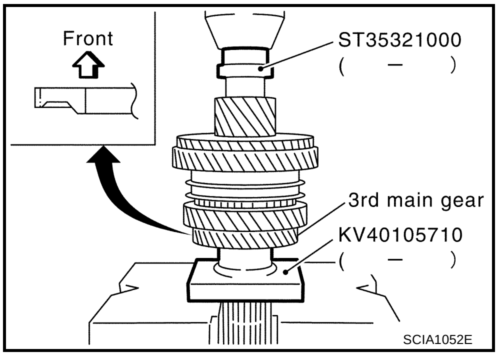

11. Select 4th main gear adjusting shim so that the dimension “C1” satisfies the standard value below, and install 4th main gear adjusting shim onto mainshaft. Refer to MT-63, "4TH MAIN GEAR ADJUSTING SHIM" .

Standard value for dimension “C1”:

173.85 - 173.95 mm (6.844 - 6.848 in)

CAUTION:

Only one adjusting shim can be selected.

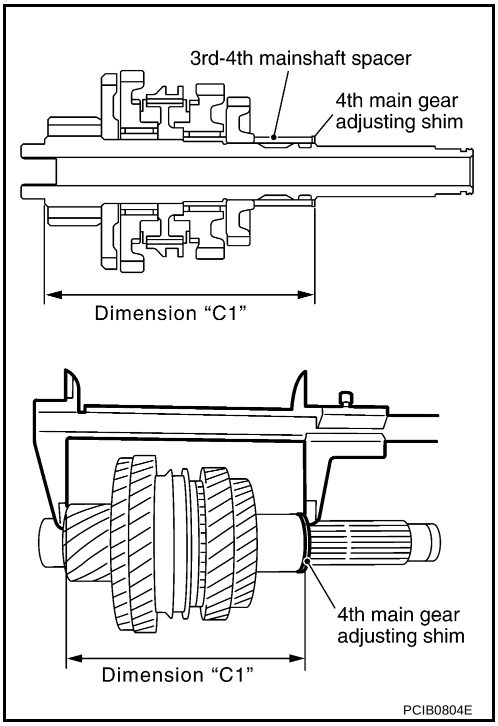

12. Press in 4th main gear using the drifts.

CAUTION:
- **Be careful with the orientation of 4th main gear.**
- **Do not reuse 4th main gear.**

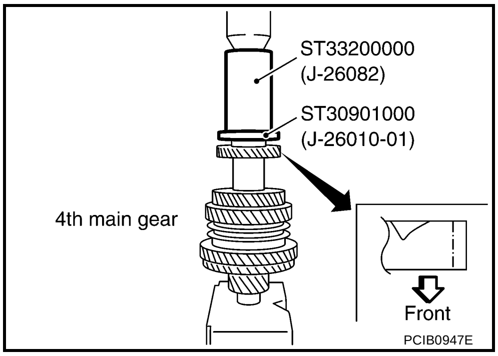

13. Press in 5th main gear using the drifts.

CAUTION:
- **Be careful with the orientation of 5th main gear.**
- **Do not reuse 5th main gear.**

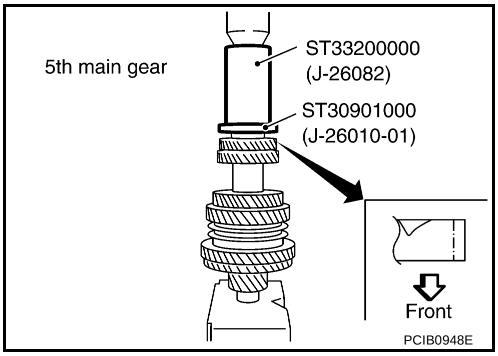

14. Install snap ring onto mainshaft, and make sure that end play of 5th main gear satisfies the standard value.

End play standard value: 0 - 0.1 mm (0 - 0.004 in)

- If the measurement is outside the standard range, reselect snap ring. Refer to MT-62, "5TH MAIN GEAR" .

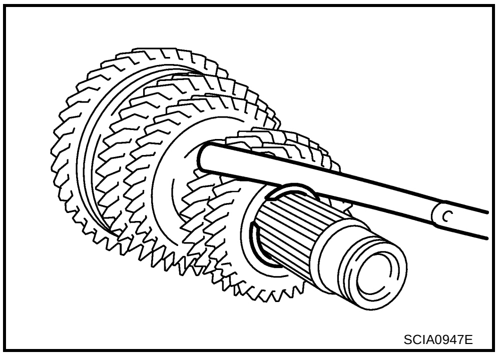

15. Press in mainshaft rear bearing using the drifts.

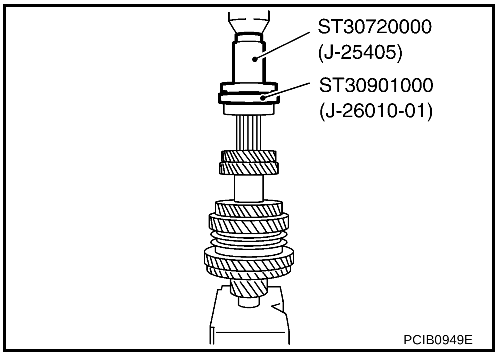

16. Install mainshaft C-ring onto mainshaft, and make sure that end play of mainshaft rear bearing satisfies the standard value.

End play standard value: 0 - 0.06 mm (0 - 0.0024 in)

- If the measurement is outside the standard range, reselect mainshaft C-ring. Refer to MT-62, "MAINSHAFT C-RING" .

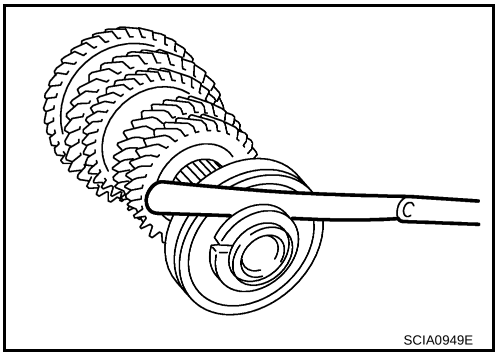

A
B
MT
D
E
F
G
H
I
J
K
L
M

17. Install C-ring holder, and then install snap ring.
    CAUTION:
    Do not reuse snap ring.

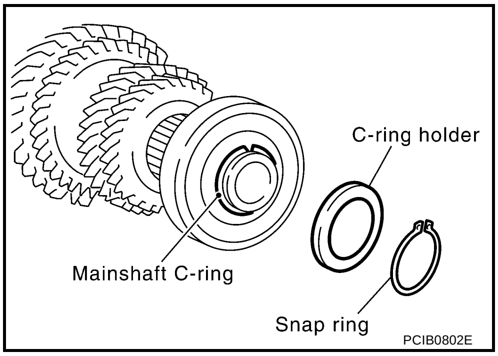

18. Check end play of 1st and 2nd main gears.

    End play standard value

1st main gear:	**0.20 - 0.30 mm (0.0079 - 0.0118 in)**
2nd main gear:	**0.06 - 0.16 mm (0.0024 - 0.0063 in)**

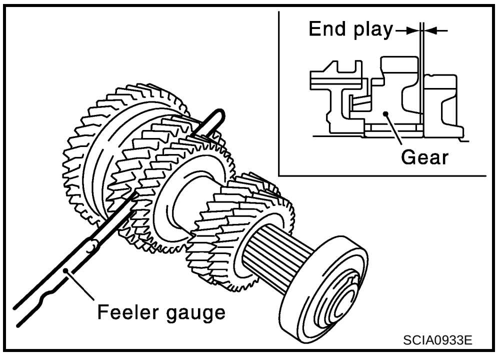

REVERSE IDLER SHAFT AND GEARS

PFP:32281

Disassembly and Assembly

ACS007YK

DISASSEMBLY

1. Remove reverse idler gear (rear), reverse coupling sleeve and reverse insert spring simultaneously.
2. Remove reverse idler gear needle bearing.
3. Remove thrust needle bearing.
4. Remove reverse baulk ring.
5. Remove reverse idler gear (front).
6. Remove reverse idler gear needle bearing.
7. Remove thrust needle bearing.
8. Remove retaining pin from reverse idler shaft.

   CAUTION:
   Do not reuse retaining pin.

INSPECTION AFTER DISASSEMBLY

Reverse Idler Shaft and Gears

Check items below. If necessary, replace them with new ones.

- Damage, peeling, dent, uneven wear, bending, and other non-standard conditions of the shaft.
- Excessive wear, damage, peeling, and other non-standard conditions of the gears.

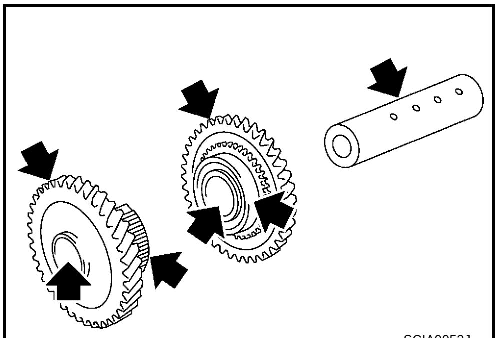

SCIA0953J

Synchronizer

Check items below. If necessary, replace them with new ones.

- Damage and unusual wear on contact surfaces of reverse coupling sleeve, reverse synchronizer hub, and reverse insert spring.
- Reverse coupling sleeve and reverse synchronizer hub must move smoothly.

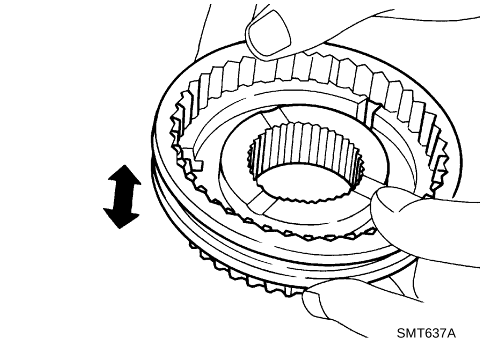

SMT637A

- If any crack, damage, or excessive wear is found on cam face of reverse baulk ring or working face of insert, replace it.

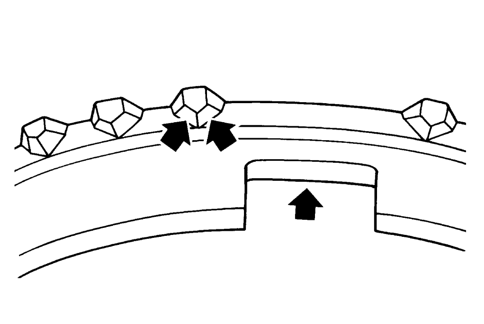

SMT867D

BAULK RING CLEARANCE

- Push baulk ring on the cone, and measure the clearance between baulk ring and cone. If the measurement is below limit, replace it with a new one.

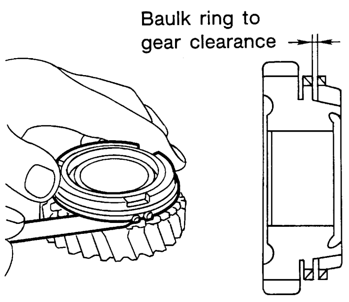

SMT140

Clearance

Standard value:	**0.95 - 1.4 mm (0.037 - 0.055 in)**
Limit value:	**0.7 mm (0.028 in)**

Bearing

Check items below. If necessary, replace them with new ones.

- Damage and rough rotation of bearing.

ASSEMBLY

Paying attention to the following caution, assemble in the reverse order of disassembly.

CAUTION:

- **Be careful with the orientation of reverse insert spring.**

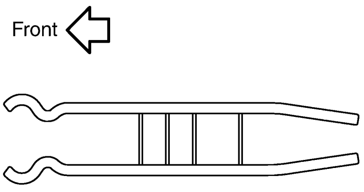

PCIB0930E

FINAL DRIVE

PFP:38411

Disassembly and Assembly

ACS007YM

PRE-INSPECTION

- Check the clearance between side gear and differential case as follows.

1. Clean final drive assembly sufficiently to prevent side gear thrust washer, differential case, side gear, and other parts from sticking by gear oil.

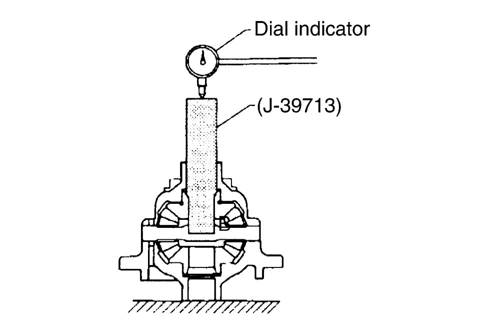

PCIB0950E

2. Put differential case vertically so that side gear to be measured faces upward.
3. Place the preload adapter and a dial indicator onto side gear. Move side gear up and down, and measure the clearance.

   Clearance between side gear and differential case:

   0.1 - 0.2 mm (0.004 - 0.008 in)

   CAUTION:
   There should be no resistance and gears should rotate freely.

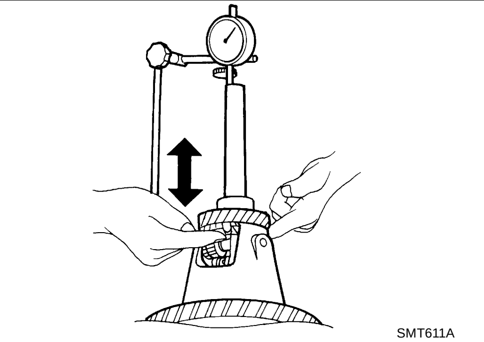
SMT611A

4. If not within specification, adjust the clearance by changing side gear thrust washer thickness.
5. Turn differential case upside down, and measure the clearance between side gear and differential case on the other side in the same way.

DISASSEMBLY

1. Remove final gear mounting bolts, and then separate the final gear from differential case.
2. Remove differential side bearing (clutch housing side) using the drift and pullers.

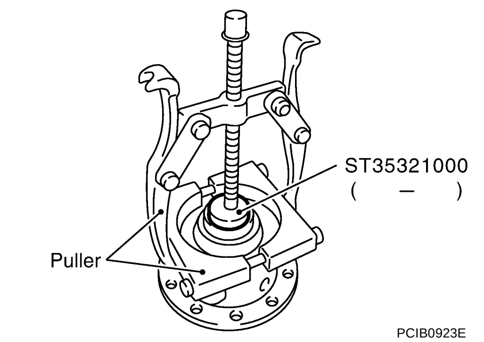

PCIB0923E

3. Remove differential side bearing (transaxle case side) using the drift and pullers.

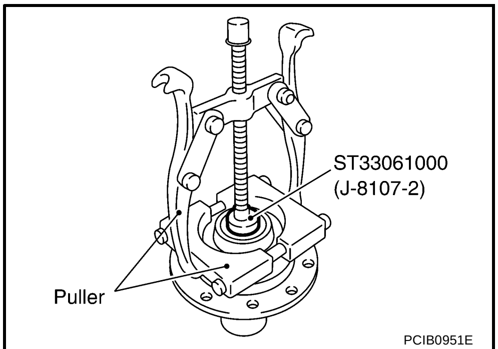

PCIB0951E

4. Remove retaining pin from differential case using a pin punch, and then remove pinion mate shaft.
5. Rotate pinion mate gears, and remove pinion mate gears, pinion mate thrust washers, side gears, and side gear thrust washers from differential case.

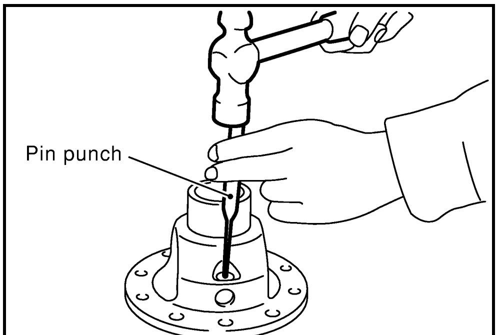

SCIA0908E

INSPECTION AFTER DISASSEMBLY

Gear, Washer, Shaft and Case

- Check side gears, side gear thrust washers, pinion mate shaft, pinion mate gears, pinion mate thrust washers and differential case. If necessary, replace with a new one.

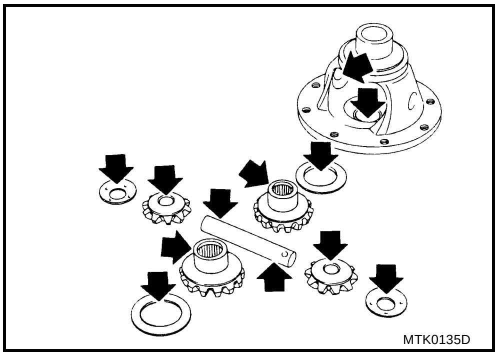
MTK0135D

Bearing

- Check for bearing damage and rough rotation. If necessary, replace with a new one.

CAUTION:

When replacing tapered roller bearing, replace outer and inner races as a set.

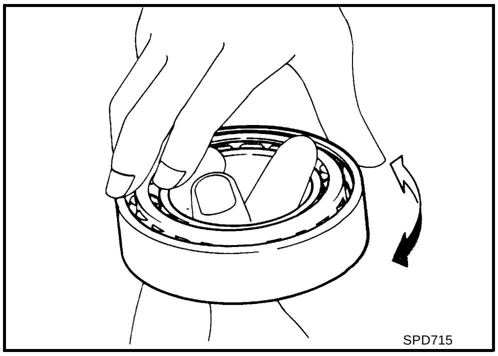
SPD715

ASSEMBLY

1. Apply gear oil to sliding area of differential case, each gear, and thrust washer.
2. Install side gear thrust washers and side gears into differential case.
3. While rotating pinion mate thrust washers and pinion mate gears, aligning them diagonally, install them into differential case.

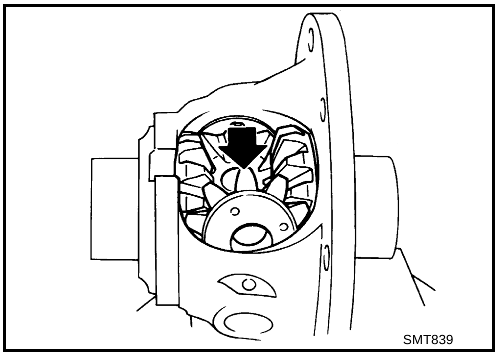
SMT839

4. Insert pinion mate shaft into differential case.
   CAUTION:
   Be sure not to damage pinion mate thrust washers.

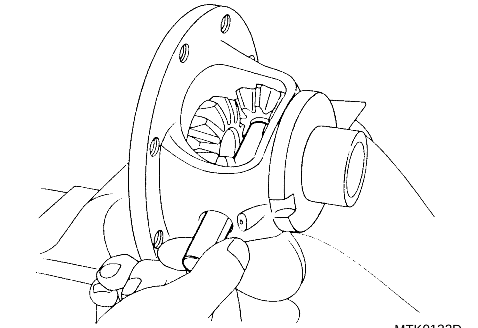

MTK0132D

5. Measure end play of side gears following the procedure below. Then select side gear thrust washer.
   a. Put differential case vertically so that its side gear to be measured faces upward.
   b. Place the preload adapter and a dial indicator onto side gears.

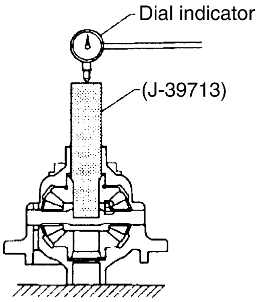

PCIB0950E

   c. Move side gears up and down to measure end play, and select thrust washer so that it satisfies the standard value. Refer to MT-62, "DIFFERENTIAL SIDE GEAR THRUST WASHER" .

   End play standard value:
   0.1 - 0.2 mm (0.004 - 0.008 in)

   CAUTION:
   - **There should be no resistance and gears should rotate freely.**
   - **Place differential case upside down. Measure the end play for opposite side-gears likewise securely.**
   - **Only one thrust washer can be selected.**

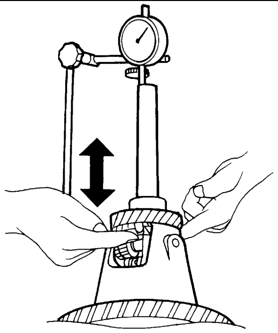

SMT611A

6. Install retaining pin into pinion mate shaft using a pin punch.
   CAUTION:
   Do not reuse retaining pin.

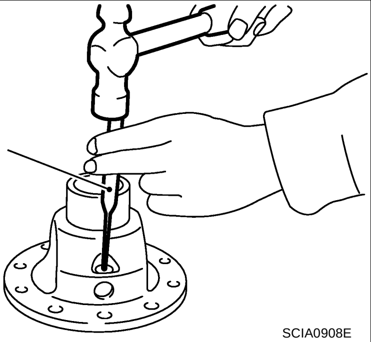

SCIA0908E

7. Press in differential side bearing (transaxle case side) to differential case using the drifts.

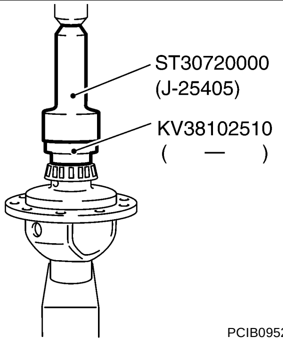

PCIB0952E

8. Press in differential side bearing (clutch housing side) to differential case using the drifts.

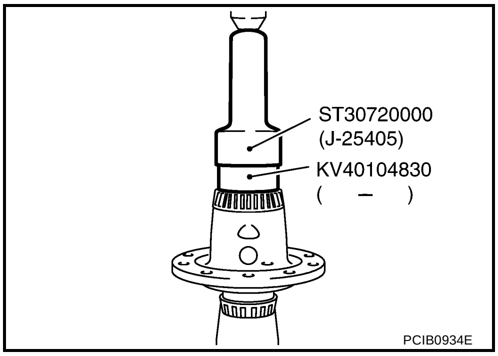

9. Install final gear into differential case, and tighten final gear mounting bolts to the specified torque. Refer to MT-23, "Final Drive Components" .

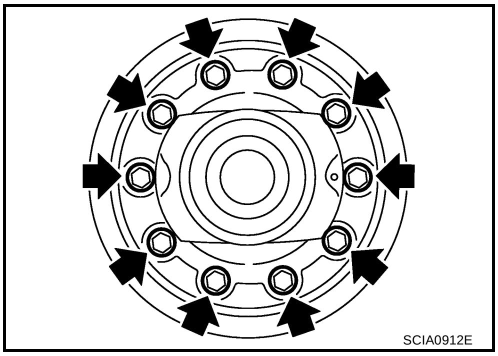

SHIFT CONTROL

PFP:32982

Inspection

ACS007YO

- Check contact surfaces and sliding area for wear, damage, bending, etc. If necessary, replace parts.

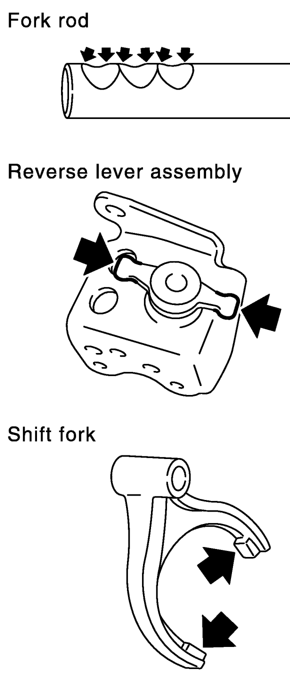

SCIA0913E

SHIFT FORK

- Check if the width of shift fork hook (sliding area with coupling sleeve) is within allowable specification below.

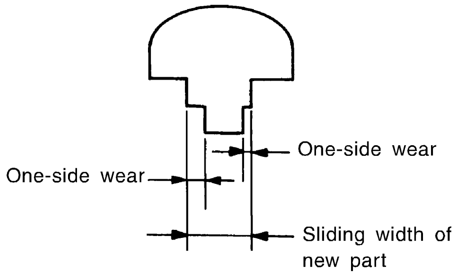

SMT801D

Item	One-side wear specification	Sliding width of new part
1st-2nd	0.2 mm (0.008 in)	7.80 - 7.93 mm (0.3071 - 0.3122 in)
3rd-4th	0.2 mm (0.008 in)	7.80 - 7.93 mm (0.3071 - 0.3122 in)
5th	0.2 mm (0.008 in)	6.10 - 6.23 mm (0.2402 - 0.2453 in)
Reverse	0.2 mm (0.008 in)	12.80 - 12.93 mm (0.5039 - 0.5091 in)

SERVICE DATA AND SPECIFICATIONS (SDS)

PFP:00030

General Specifications

ACS007YQ

TRANSAXLE

Engine type			QR25DE
Transaxle model			RS5F51A
Model code number			EQ008
Number of speed			5
Synchromesh type			Warner
Shift pattern			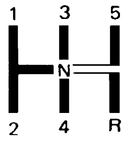 SCIA0821E
Gear ratio	1st		3.416
	2nd		1.944
	3rd		1.258
	4th		0.947
	5th		0.733
	Reverse		3.252
Number of teeth	Input gear	1st	12
		2nd	18
		3rd	31
		4th	38
		5th	45
		Reverse	12
	Main gear	1st	41
		2nd	35
		3rd	39
		4th	36
		5th	33
		Reverse	38
	Reverse idler gear	Front	37
		Rear	38
Oil level		mm (in)	168.0 - 174.0 (6.61 - 6.85)
Oil capacity (Reference)		ℓ (US qt, Imp qt)	2.2 (2-3/8, 2)
Remarks	Reverse synchronizer		Installed
	Double-cone synchronizer		3rd
	Triple-cone synchronizer		1st and 2nd

FINAL GEAR

Engine type	QR25DE
Transaxle model	RS5F51A
Model code number	EQ008
Final gear ratio	4.428

Engine type		QR25DE
Transaxle model		RS5F51A
Model code number		EQ008
Number of teeth	Final gear/Pinion	62/14
	Side gear/Pinion mate gear	14/10

Gear End Play

ACS007YR

Unit: mm (in)

Gear	End play
1st main gear	0.20 - 0.30 (0.0079 - 0.0118)
2nd main gear	0.06 - 0.16 (0.0024 - 0.0063)
3rd input gear	0.18 - 0.31 (0.0071 - 0.0122)
4th input gear	0.20 - 0.30 (0.0079 - 0.0118)
5th input gear	0.06 - 0.16 (0.0024 - 0.0063)

Baulk Ring Clearance

ACS007YS

Unit: mm (in)

Measurement point		Standard value	Limit value
3rd (Double-cone synchronizer)	Clearance between synchronizer cone and inner baulk ring end face “A”	0.6 - 0.8 (0.024 - 0.031)	0.2 (0.008)
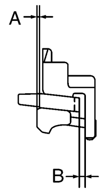 PCIB0249E	Clearance between outer baulk ring pawl and synchronizer cone “B”	0.6 - 1.1 (0.024 -0.043)	0.2 (0.008)
1st and 2nd (Triple-cone synchronizer)	Clearance between synchronizer cone and clutch gear end face “A”	0.6 - 1.2 (0.024 - 0.047)	0.3 (0.012)
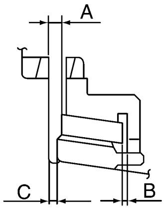 PCIB0835J	Clearance between outer baulk ring pawl and synchronizer cone “B”	0.6 - 1.1 (0.024 - 0.043)	0.2 (0.008)
	Clearance between inner baulk ring and clutch gear end face “C”	0.7 - 1.1 (0.028 - 0.043)	0.3 (0.012)
4th		0.9 - 1.45 (0.035 - 0.057)	0.7 (0.028)
5th		0.95 - 1.4 (0.037 - 0.055)	0.7 (0.028)
Reverse		0.95 - 1.4 (0.037 - 0.055)	0.7 (0.028)

Available Snap Rings

ACS007YT

INPUT SHAFT BEARING SPACER

End play		0 - 0.1 mm (0 - 0.004 in)	
Thickness mm (in)	Part number*	Thickness mm (in)	Part number*
1.71 (0.0673)	32204 8H510	2.01 (0.0791)	32204 8H516
1.76 (0.0693)	32204 8H511	2.06 (0.0811)	32204 8H517
1.81 (0.0713)	32204 8H512	2.11 (0.0831)	32204 8H518
1.86 (0.0732)	32204 8H513	2.16 (0.0850)	32204 8H519
1.91 (0.0752)	32204 8H514	2.21 (0.0870)	32204 8H520
1.96 (0.0772)	32204 8H515	2.26 (0.0890)	32204 8H521

*: Always check with the Parts Department for the latest parts information.

5TH MAIN GEAR

End play		0 - 0.1 mm (0 - 0.004 in)	
Thickness mm (in)	Part number*	Thickness mm (in)	Part number*
1.85 (0.0728) 1.90 (0.0748) 1.95 (0.0768) 2.00 (0.0787)	32204 8H500 32204 8H501 32204 8H502 32204 8H503	2.05 (0.0807) 2.10 (0.0827) 2.15 (0.0846) 2.20 (0.0866)	32204 8H504 32204 8H505 32204 8H506 32204 8H507

*: Always check with the Parts Department for the latest parts information.

Available C-Rings

ACS007YU

MAINSHAFT C-RING

End play		0 - 0.06 mm (0 - 0.0024 in)	
Thickness mm (in)	Part number*	Thickness mm (in)	Part number*
2.535 (0.0998) 2.565 (0.1010) 2.595 (0.1022) 2.625 (0.1033) 2.655 (0.1045) 2.685 (0.1057) 2.715 (0.1069) 2.745 (0.1081) 2.775 (0.1093) 2.805 (0.1104)	32348 8H800 32348 8H801 32348 8H802 32348 8H803 32348 8H804 32348 8H805 32348 8H806 32348 8H807 32348 8H808 32348 8H809	2.835 (0.1116) 2.865 (0.1128) 2.895 (0.1140) 2.925 (0.1152) 2.955 (0.1163) 2.985 (0.1175) 3.015 (0.1187) 3.045 (0.1199) 3.075 (0.1211)	32348 8H810 32348 8H811 32348 8H812 32348 8H813 32348 8H814 32348 8H815 32348 8H816 32348 8H817 32348 8H818

*: Always check with the Parts Department for the latest parts information.

Available Thrust Washer

ACS007YV

INPUT SHAFT THRUST WASHER

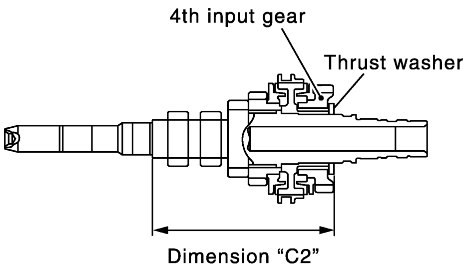

SCIA1008E

Standard length "C2"		154.7 - 154.8 mm (6.091 - 6.094 in)	
Thickness mm (in)	Part number*	Thickness mm (in)	Part number*
3.84 (0.1512) 3.90 (0.1535) 3.96 (0.1559)	32347 8H500 32347 8H501 32347 8H502	4.02 (0.1583) 4.08 (0.1606) 4.14 (0.1630)	32347 8H503 32347 8H504 32347 8H505

*: Always check with the Parts Department for the latest parts information.

DIFFERENTIAL SIDE GEAR THRUST WASHER

Allowable clearance between side gear and differential case with washer	0.1 - 0.2 mm (0.004 - 0.008 in)
Thickness mm (in)	Part number*
0.75 (0.0295) 0.80 (0.0315) 0.85 (0.0335) 0.90 (0.0354) 0.95 (0.0374)	38424 81X00 38424 81X01 38424 81X02 38424 81X03 38424 81X04

*: Always check with the Parts Department for the latest parts information.

Available Adjusting Shims

ACS007YW

4TH MAIN GEAR ADJUSTING SHIM

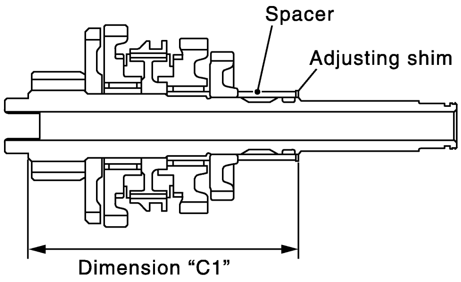

SCIA1009E

Standard length “C1”		173.85 - 173.95 mm (6.844 - 6.848 in)	
Thickness mm (in)	Part number*	Thickness mm (in)	Part number*
0.52 (0.0205)	32238 8H500	0.84 (0.0331)	32238 8H504
0.60 (0.0236)	32238 8H501	0.92 (0.0362)	32238 8H505
0.68 (0.0268)	32238 8H502	1.00 (0.0394)	32238 8H506
0.76 (0.0299)	32238 8H503	1.08 (0.0425)	32238 8H507

*: Always check with the Parts Department for the latest parts information.

INPUT SHAFT REAR BEARING ADJUSTING SHIM

End play			0 - 0.06 mm (0 - 0.0024 in)		
Thickness mm (in)	Part number*	Thickness mm (in)	Part number*	Thickness mm (in)	Part number*
0.40 (0.0157)	32225 8H500	0.88 (0.0346)	32225 8H512	1.36 (0.0535)	32225 8H524
0.44 (0.0173)	32225 8H501	0.92 (0.0362)	32225 8H513	1.40 (0.0551)	32225 8H560
0.48 (0.0189)	32225 8H502	0.96 (0.0378)	32225 8H514	1.44 (0.0567)	32225 8H561
0.52 (0.0205)	32225 8H503	1.00 (0.0394)	32225 8H515	1.48 (0.0583)	32225 8H562
0.56 (0.0220)	32225 8H504	1.04 (0.0409)	32225 8H516	1.52 (0.0598)	32225 8H563
0.60 (0.0236)	32225 8H505	1.08 (0.0425)	32225 8H517	1.56 (0.0614)	32225 8H564
0.64 (0.0252)	32225 8H506	1.12 (0.0441)	32225 8H518	1.60 (0.0630)	32225 8H565
0.68 (0.0268)	32225 8H507	1.16 (0.0457)	32225 8H519	1.64 (0.0646)	32225 8H566
0.72 (0.0283)	32225 8H508	1.20 (0.0472)	32225 8H520	1.68 (0.0661)	32225 8H567
0.76 (0.0299)	32225 8H509	1.24 (0.0488)	32225 8H521	1.72 (0.0677)	32225 8H568
0.80 (0.0315)	32225 8H510	1.28 (0.0504)	32225 8H522		
0.84 (0.0331)	32225 8H511	1.32 (0.0520)	32225 8H523		

*: Always check with the Parts Department for the latest parts information.

MAINSHAFT REAR BEARING ADJUSTING SHIM

End play		0 - 0.06 mm (0 - 0.0024 in)	
Thickness mm (in)	Part number*	Thickness mm (in)	Part number*
0.44 (0.0173)	32238 8H510	0.80 (0.0315)	32238 8H519
0.48 (0.0189)	32238 8H511	0.84 (0.0331)	32238 8H520
0.52 (0.0205)	32238 8H512	0.88 (0.0346)	32238 8H521
0.56 (0.0220)	32238 8H513	0.92 (0.0362)	32238 8H522
0.60 (0.0236)	32238 8H514	0.96 (0.0378)	32238 8H523
0.64 (0.0252)	32238 8H515	1.00 (0.0394)	32238 8H524
0.68 (0.0268)	32238 8H516	1.04 (0.0409)	32238 8H560
0.72 (0.0283)	32238 8H517	1.08 (0.0425)	32238 8H561
0.76 (0.0299)	32238 8H518		

*: Always check with the Parts Department for the latest parts information.

REVERSE IDLER GEAR ADJUSTING SHIM

End play		0.04 - 0.10 mm (0.0016 - 0.0039 in)	
Thickness mm (in)	Part number*	Thickness mm (in)	Part number*
1.76 (0.0693) 1.80 (0.0709) 1.84 (0.0724) 1.88 (0.0740) 1.92 (0.0756) 1.96 (0.0772) 2.00 (0.0787) 2.04 (0.0803) 2.08 (0.0819) 2.12 (0.0835) 2.16 (0.0850) 2.20 (0.0866)	32237 8H800 32237 8H801 32237 8H802 32237 8H803 32237 8H804 32237 8H805 32237 8H806 32237 8H807 32237 8H808 32237 8H809 32237 8H810 32237 8H811	2.24 (0.0882) 2.28 (0.0898) 2.32 (0.0913) 2.36 (0.0929) 2.40 (0.0945) 2.44 (0.0961) 2.48 (0.0976) 2.52 (0.0992) 2.56 (0.1008) 2.60 (0.1024) 2.64 (0.1039)	32237 8H812 32237 8H813 32237 8H814 32237 8H815 32237 8H816 32237 8H817 32237 8H818 32237 8H819 32237 8H820 32237 8H821 32237 8H822

*: Always check with the Parts Department for the latest parts information.

Available Shims

ACS007YX

— Differential Side Bearing Preload and Adjusting Shim

BEARING PRELOAD

Differential side bearing preload: L*	0.15 - 0.21 mm (0.0059 - 0.0083 in)

*: Install shims which are “deflection of differential case” + “L” in thickness.

DIFFERENTIAL SIDE BEARING ADJUSTING SHIM(S)

Thickness mm (in)	Part number*	Thickness mm (in)	Part number*
0.48 (0.0189) 0.52 (0.0205) 0.56 (0.0220) 0.60 (0.0236) 0.64 (0.0252) 0.68 (0.0268)	31438 80X00 31438 80X01 31438 80X02 31438 80X03 31438 80X04 31438 80X05	0.72 (0.0283) 0.76 (0.0299) 0.80 (0.0315) 0.84 (0.0331) 0.88 (0.0346) 0.92 (0.0362)	31438 80X06 31438 80X07 31438 80X08 31438 80X09 31438 80X10 31438 80X11

*: Always check with the Parts Department for the latest parts information.